On the Indifferentiability of Key-Alternating Feistel Ciphers with No Key Derivation

Chun Guo[1,2], and Dongdai Lin[1⋆]

[1] State Key Laboratory of Information Security (SKLOIS),
Institute of Information Engineering (IIE),
Chinese Academy of Sciences (CAS)
[2] University of Chinese Academy of Sciences (UCAS)
{guochun,ddlin}@iie.ac.cn

Abstract. Feistel constructions have been shown to be indifferentiable from random permutations (STOC 2011). Whereas how to properly mix the keys into an un-keyed Feistel construction (without appealing to domain separation technique) to obtain a block cipher which resists known-key and chosen-key attacks remains an open problem. We study this. NSA's SIMON family of block ciphers takes a construction which has the subkey xored into a halve of the state at each round. More clearly, at the i-th round, the state is updated according to

$$(x_i, x_{i-1}) \mapsto (x_{i-1} \oplus F_i(x_i) \oplus k_i, x_i)$$

For such key-alternating Feistel ciphers, we show that 21 rounds are sufficient to achieve indifferentiability from ideal ciphers with $2n$-bit blocks and n-bit keys, assuming the n-to-n-bit round functions $F_1, \ldots, F_{21}$ to be random and public and an identical user-provided n-bit key to be applied at each round. This gives a solution to the problem mentioned before, and is the first to study the indifferentiability of key-alternating Feistel ciphers to our knowledge.

Keywords: block cipher, ideal cipher, indifferentiability, key-alternating cipher, Feistel cipher.

1 Introduction

Block ciphers are the most important primitives in cryptography. Most of the existent designs can be roughly split into two families, namely Feistel-based ciphers and substitution-permutation networks (SPNs). For a block cipher, the standard security notion concerns with the indistinguishability from a random permutation when the key is fixed to some unknown random values. Such pseudorandomness captures the security in traditional single secret key setting. However,

⋆ Partially supported by a National Key Basic Research Project of China (2011CB302400), National Science Foundation of China (61379139) and the "Strategic Priority Research Program" of the Chinese Academy of SciencesGrant No. XDA06010701.

block ciphers find numerous and essential uses beyond encryption, such as constructing hash functions, message authentication codes, etc. These applications require the security in the open key model, where the adversary knows or even controls the keys. To assess such stronger security, an extension of the indistinguishability notion, the indifferentiability framework, has to be employed. This framework provides a formal way to assess the security of idealized constructions in the settings where the underlying primitives are *public*. For this, one use the framework to evaluate the "closeness" of the block cipher construction to an *ideal cipher* $\mathbf{E} : \{0,1\}^n \times \{0,1\}^\kappa \to \{0,1\}^n$, which is taken randomly from the set of $(2^n!)^{2^k}$ block ciphers with key space $\{0,1\}^\kappa$ and plaintext and ciphertext space $\{0,1\}^n$. Such indifferentiability proofs eliminate the possibility of generic attacks which do not exploit the weakness of the underlying building blocks.

Indifferentiability Framework The indifferentiability framework was introduced in 2004[22]. The framework formalizes a sufficient condition to safely replace an ideal primitive by some idealized constructions. Briefly speaking, for a construction $\mathbf{C}^{\mathbf{G}}$ from an idealized primitive $\mathbf{G}$ (hopefully simpler/weaker), if $\mathbf{C}^{\mathbf{G}}$ is indifferentiable from another ideal primitive $\mathcal{T}$, then $\mathbf{C}^{\mathbf{G}}$ can replace $\mathcal{T}$ in "most" systems. A formal definition is recalled as follows.

Definition 1. *A primitive $\mathbf{C}^{\mathbf{G}}$ with oracle access to and ideal primitive $\mathbf{G}$ is said to be statistically and strongly (q, σ, ε)-indifferentiable from an ideal primitive $\mathcal{T}$ if there exists a simulator $\mathbf{S}^{\mathcal{T}}$ s.t. $\mathbf{S}$ makes at most σ queries to $\mathcal{T}$, and for any distinguisher D which issues at most q queries, it holds that*

$$|Pr[D^{\mathbf{C}^{\mathbf{G}},\mathbf{G}} = 1] - Pr[D^{\mathcal{T},S^{\mathcal{T}}} = 1]| < \varepsilon$$

Since then, indifferentiability framework has been applied to various constructions, including variants of Merkle-Damgård, sponge construction, Feistel[13], and iteratated Even-Mansour ciphers[2,17]. [17] showed the indifferentiability of 12-round iteratated Even-Mansour ciphers with an identical user-provided n-bit key applied at each round from ideal ciphers with n-bit blocks and n-bit keys; this work is strongly relevant to ours.

Feistel Constructions, and Previous Works Feistel networks were first seen commercially in Lucifer cipher designed in 1973, and have been used by a large proportion of block ciphers since then. Starting from the seminal Luby-Rackoff paper[19], Feistel constructions have been studied extensively. Most of the works on provable security fall in Luby-Rackoff framework, in which the round functions are idealized as being uniformly random and secret. A plenty of earlier works studied the pseudorandomness of Feistel (variants) in Luby-Rackoff setting, e.g. [23,21,24]; they reveal the security of Feistel-based ciphers in single secret key setting.

As to resistance against known-key/related-key attacks, [20] and [3] were/can be seen as discussions on the security of Feistel construction with random round

functions in known-key setting, while Barbosa *et. al*[5] analyzed Feistel constructions with general keyed round functions in related-key setting, and suggested achieving resistance against related-key attacks by suitably reusing round keys. However, the works mentioned before do not study how to concretely mix the keys into the state.

As to indifferentiability (from random permutations), given that the round functions are independent random ones, results include [12], [27], and [13], and the number of rounds required was finally fixed to 14[13]. By this, a Feistel-based cipher indifferentiable from an ideal cipher is trivially obtained through domain separation of the underlying random functions. However such a result tells us nothing about how to mix the keys into the state. Meanwhile, to our knowledge, domain separation technique is seldom used in existent block cipher designs (possibly due to the difficulties in designing secure compression functions $\mathcal{F} : \{0,1\}^{\kappa+n} \to \{0,1\}^n$[29]). The most widely used key mixing operations are efficient ones, include xoring, modular addition, etc. See the next paragraph for some discussions.

Mixing Key into Feistel: Key-Alternating Feistel Ciphers, and Previous Works To mix the round keys into the state, we figure out three natural approaches: mixing the key into the input of the round functions, mixing the key into the halve of the state before the round functions, and mixing the key into the halve of the state after the round functions. Among the three, the first is the best studied to our knowledge, which consists of updating the state at round i according to (assuming using xor as the mixing operation) $(x_{i-1}, x_i) \mapsto (x_i, x_{i-1} \oplus F_i(x_i \oplus k_i))$, where x_{i-1} and x_i are respectively the left and right n-bit halves of the state, and k_r is an n-bit round key (Fig. 1 (left)). Such ciphers are named *Key-alternating Feistel Ciphers* (KAF for short) by Lampe *et. al*[18]. Notable instances include DES, Camellia; GOST and CAST-128 (the latter two use modular addition/substraction to insert round keys). Some notable studies are listed as follows (including studies on some variants). As to concrete attacks, Knudsen *et. al*[15] initiated the study of known-key attacks, and proposed known-key distinguishers for 7-round KAF variant based on a random permutation. Sasaki *et. al* proposed known-key distinguishers against SPN-round-function-based KAF variant[26,25]. Biryukov *et. al*[7] extended complementation property in variants of KAF to launch related-key attacks against Camellia and GOST. Isobe *et. al*[14] and Todo[29] investigated generic attacks against Feistel ciphers including KAF. However researches on provable security of KAF are much fewer compared with the counter part iterated Even-Mansour ciphers ([9,16,11],[2,17]). We are only aware of the work of Lampe *et. al*[18], which analyzed KAF in secret key setting. Hence the provable security of key-alternating Feistel ciphers in known-key and chosen-key settings remains unstudied.

Unfortunately, due to the well known complementation property (e.g. DES)

$$E(\overline{x}, \overline{k}) = \overline{E(x, k)},$$

KAF ciphers without key derivation functions are vulnerable to related-key distinguishing attack, thus not indifferentiable from ideal ciphers[3].

Appealing to key derivation functions modeled as random oracles is not a perfect solution. As pointed out in [7], KAF with as many as two *random-oracle-derived* keys alternatively applied at each round is still vulnerable to a *relaxed complementing attack*: the attacker asks the key derivation oracle for two arbitrary keys $(k_1^1, k_2^1) := KD(K^1)$ and $(k_1^2, k_2^2) := KD(K^2)$ and let $\delta_1 = k_1^1 \oplus k_1^2$, $\delta_2 = k_2^1 \oplus k_2^2$, then for plaintext pairs of the form $((x_0, x_1), (x_0 \oplus \delta_2, x_1 \oplus \delta_1))$, with probability 1 we have $\mathrm{KAF}_r((x_0, x_1), K^1) \oplus \mathrm{KAF}_r((x_0 \oplus \delta_2, x_1 \oplus \delta_1), K^2) = (\delta_1, \delta_2)$ when the number of rounds r is odd ((δ_2, δ_1) when r is even). We *conjecture* that indifferentiability may be achieved on KAF with key derivation of form $(k_1, k_2, k_3) = KD(K)$ and the three keys cyclicly applied at each round; or, on KAF with key derivation of form $(k_1, k_2) = KD(K)$ and the two keys applied in the order k_1, k_2, k_2, k_1 repeatedly. Whereas the proof still seems difficult. In addition, such results impose strong constraints on the key derivation.

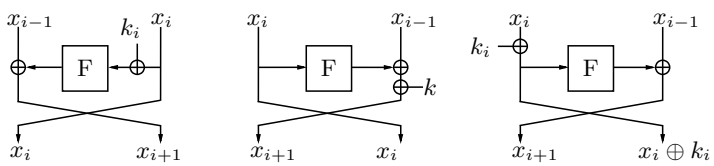

Fig. 1. Mixing the key into: (left) the input of the round function – KAF; (middle) the halve of the state after the round function – KAF^*. (right) the halve before the round function.

KAF^* The problems with KAF motivate us to turn to the other two approaches. First, consider mixing the key into the halve of the state after the round functions. To make a distinction, we denote such constructions by KAF^*, and call KAF^* with an identical user-provided n-bit key applied at each round *single-key KAF^**. For single-key KAF^*, the $2n$-bit intermediate state s_i is split to two halves, i.e. $s_i = (x_{i+1}, x_i)$ where $i \in \{0, 1, \ldots, r\}$, and at the i-th round, the state value is updated according to

$$(x_i, x_{i-1}) \mapsto (x_{i-1} \oplus F_i(x_i) \oplus k, x_i),$$

as depicted in Fig. 1 (middle). The whole construction (21-round variant) is depicted in Fig. 2. Among existent designs, NSA's SIMON family of block ciphers is based on KAF^*. XTEA can also be seen as a *variant* of KAF^*.

Links Between the Three Approaches There are weak links between the three approaches. First, clearly, r-round KAF^* can be rewritten as an r-round KAF

[3] More generally, KAF ciphers with *bit-permutation-based key derivation* are not indifferentiable from ideal ciphers.

variant with an un-keyed first round and an additional subkey xored into one of the halves of the ciphertext (depending on whether r is even or odd). However written in such a form, the round key array is much more complex than that of KAF^*. For instance, single-key KAF^* with key k (the round key array is $(k, k, k, \ldots)$) corresponds to KAF with the round key array $(0^n, k, k, 0^n, 0^n, k, k, 0^n, 0^n, \ldots)$ (k, k, 0^n, 0^n are cyclicly applied from the second round till the end). Hence for simplicity, it is unnecessary to rewrite the KAF^* under discussed to its equivalent KAF (variant) form.

Mixing the key into the halve of the state before the round functions consists of updating states according to $(x_i, x_{i-1}) \mapsto (x_{i-1} \oplus F_i(x_i \oplus k_i), x_i \oplus k_i)$, as depicted in Fig. 1 (right). Blowfish can be seen as a variant of this construction (however it works with *keyed* round functions). One can easily see that this approach is almost equivalent to KAF^*: KAF^* can be rewritten as such a construction with an un-keyed first round and an additional subkey xored into the left halve of the ciphertext. Hence we focus on KAF^* in this paper.

Our Contributions Although Feistel constructions have been shown to be indifferentiable from random permutations[13], how to properly mix the keys into a keyless Feistel construction without appealing to a trivial domain separation argument to obtain a block cipher provably secure against known-key and chosen-key attacks remains an open problem. Moreover, since the indifferentiability of iterated Even-Mansour ciphers has been shown[2,17], the analogues on key-alternating Feistel ciphers attract attention. These two questions are in some sense the same, that is, *under which assumptions can we make key-alternating Feistel ciphers – especially those without cryptographically strong assumptions about the key derivation functions – indifferentiable from ideal ciphers.* For single-key KAF^*, we show 21 rounds to be sufficient, thus giving an answer to this question and partially filling in the gap in the field of Feistel ciphers:

Theorem *The 21-round key-alternating Feistel cipher KAF^*_{21} with all round functions $\mathbf{F} = (F_1, \ldots, F_{21})$ being 21 independent n-to-n-bit random functions and an identical (user-provided) n-bit key k applied at each round is indifferentiable from an ideal cipher with $2n$-bit blocks and n-bit keys.*

To our knowledge, this paper is the first to study the indifferentiability of key-alternating Feistel ciphers, in particular, with no key derivation.

From a practical point of view, our results reveal a possible choice to resist complementing attack and its extensions[7] when designing Feistel ciphers. KAF with random oracle modeled key derivation functions may also have such resistance. However, practical key derivation algorithms are usually designed to be "lightweight" and moderately complex, and KAF with such moderately complex key derivations may still be attacked in hash mode (Camellia[7]). Hence we think our results have its own interest. On the other hand, since publicly released in June 2013, the SIMON family of block ciphers[6] designed by NSA has attracted considerable attention due to its simple structure, high flexibility, and remarkable performance[4,8,1,28,10]. SIMON family is based on KAF^* instead of the more widely studied KAF. Our results reveal possible underlying reasons.

Our Techniques We reuse the framework(s) used in [13] and [17], with adaptations. The framework consists of constructing simulator which works by detecting and completing *partial chains* created by the queries of the distinguisher. The core idea to ensure consistency in the answers while avoid exponentially many chain completions is assigning to each of the rounds in the construction a unique and specific role needed in the proof, including *chain detection*, *uniformness ensuring*, and *chain adaptation* (see Fig. 2). By this, the simulator first detects new partial chains when the associated values have "filled" the chain detection zone; then fills in the whole computation path by both querying the ideal primitive and simulating the other necessary function values, until only the values of the round functions in the chain adaptation zone remain undefined; and finally defines these values to complete the whole path so that the answers of the ideal primitive are consistent with the function values simulated by the simulator.

To fit into the KAF^* context, the framework has to be adapted. Note that KAF^* has the following property: given the queries to 3 consecutive round functions, namely x_i, x_{i+1}, and x_{i+2}, a full computation path can be specified with the associated key $k = x_i \oplus F_{i+1}(x_{i+1}) \oplus x_{i+2}$, after which it is possible to move forward and backward along the path. On the other hand, for previous studied constructions, two such queries are sufficient, e.g. for un-keyed Feistel, two queries x_i and x_{i+1} are sufficient to specify a path (exactly as done in [13]). For this, we adapt the framework in two ways:

1. we increase the number of rounds used for chain detection to 3. The necessity of such a change has been pointed out by Lampe *et. al.*
2. we increase the number of rounds used to ensure randomness. Surrounding each adaptation zone with 2 *always-randomly-defined* buffer rounds to protect the former is a key point of this framework. It shall be shown that the simulator does not define the values in the buffer rounds while completing other chains. This idea works well in previous contexts. However, in KAF^* context, if we continue surrounding with 2 buffer rounds, then when a chain is to be adapted, the corresponding function values in the buffer round may have been defined; this can be shown by a simple operation sequence. To get rid of this, we increase the number of buffer rounds to 4 – more clearly, 2 buffer rounds at each side of each adaptation zone (and in total 8 for the whole construction). We then prove that unless an improbable event happens, the simulator does not define the values in the buffer rounds *exactly next to* the adaptation zones when completing other chains, and then all chains can be adapted freely.

To show the indistinguishability of the systems, we combine the *randomness mapping argument*[13] (RMA for short) and its *relaxed* version[2] (RRMA for short). This allows us to bypass the intermediate system composed of the idealized construction and the simulator.

Organization of this Paper Sect. 2 contains main theorem. Sect. 3 presents the simulator. Finally, Sect. 4 gives the proof. Some additional notations will be introduced later, when necessary.

2 Indifferentiability for 21-round Single-Key KAF^*

The main theorem is presented as follows.

Theorem 1. *For any q, the 21-round single-key key-alternating Feistel cipher KAF^*_{21} with all round functions $\mathbf{F} = (F_1, \ldots, F_{21})$ being 21 independent n-to-n-bit random functions and an identical (user-provided) n-bit key k applied at each round is strongly and statistically (q, σ, ε)-indifferentiable from an ideal cipher $\mathbf{E}$ with $2n$-bit blocks and n-bit keys, where*

$$\sigma = 2^{11} \cdot q^9 \text{ and } \varepsilon \leq \frac{2^{19} \cdot q^{15}}{2^{2n}} + \frac{2^{222} \cdot q^{30}}{2^n} + \frac{2^{34} \cdot q^6}{2^{2n}} = O(\frac{q^{30}}{2^n})$$

.

To prove Theorem 1 we firstly describe a simulator $\mathbf{S}$ which mimics the behaviors of the random functions $\mathbf{F}$, then bound the complexity of $\mathbf{S}$ and prove the indistinguishability of the simulated world $\Sigma_1(\mathbf{E}, \mathbf{S})$ and the real world $\Sigma_2(KAF^*_{21}, \mathbf{F})$.

3 The Simulator

We first provide a high-level description of $\mathbf{S}$, then present the pseudocode to illustrate it more clearly.

To simplify the proof, we take a strategy introduced by Andreeva *et. al*[2], that is, making the randomness taken by the simulator $\mathbf{S}$, the cipher $\mathbf{E}$ (in the simulated world), and the random functions $\mathbf{F}$ (in the real world) *explicit*. The simulator's random tape is an array of tables $\varphi = (\varphi_1, \ldots, \varphi_{21})$, where each φ_i maps entries $x \in \{0,1\}^n$ to uniform and independent values in $\{0,1\}^n$. The cipher's random tape is a table η which encodes an ideal cipher with $2n$-bit blocks and n-bit keys. More clearly, η is selected uniformly at random from all tables with the property of mapping entries $(\delta, k, z) \in \{+,-\} \times \{0,1\}^n \times \{0,1\}^{2n}$ to uniform values $z^{'} \in \{0,1\}^{2n}$ such that $\eta(+,k,z) = z^{'}$ iff. $\eta(-,k,z^{'}) = z$. The random functions $\mathbf{F}$ have access to the array of tables $\pi = (\pi_1, \ldots, \pi_{21})$ where each π_i maps entries $x \in \{0,1\}^n$ to uniform and independent values in $\{0,1\}^n$. We denote the constructions/primitives which take randomness from the tapes φ, η, and π by $\mathbf{S}(\varphi)$, $\mathbf{E}(\eta)$, and $\mathbf{F}(\pi)$ respectively. Among the three, $\mathbf{E}(\eta)$ and $\mathbf{F}(\pi)$ simply take the corresponding values in η and π as answers to queries. As argued by Andreeva *et. al*[2], such a strategy does not reduce the validness of the simulating, since access to such tapes can be efficiently simulated by uniformly sampling.

3.1 High-level Description of the Simulator

$\mathbf{S}(\varphi)$ provides an interface $\mathbf{S}(\varphi).F(i,x)$ to the distinguisher for querying the simulated random function F_i on value x, where $i \in \{1, \ldots, 21\}$ and $x \in \{0,1\}^n$. For each i, the simulator maintains a hash table G_i that has entries in the form of

pairs (x, y), which denote pairs of inputs and outputs of $\mathbf{S}(\varphi).F(i, x)$. Denote the fact that x is a preimage in the table G_i by $x \in G_i$, and $G_i(x)$ the corresponding image when $x \in G_i$.

Receiving a query $\mathbf{S}(\varphi).F(i, x)$, $\mathbf{S}(\varphi)$ looks in G_i, returns $G_i(x)$ if $x \in G_i$. Otherwise $\mathbf{S}(\varphi)$ accesses the tap φ_i to draw the answer $\varphi_i(x)$ and adds the entry $(x, \varphi_i(x))$ to G_i, and then, if i belongs to the set $\{3, 10, 11, 12, 19\}$, the *chain detection* mechanism and subsequent *chain completion* mechanism of $\mathbf{S}(\varphi)$ will be triggered. These two mechanisms help in ensuring that the answers of the random functions simulated by $\mathbf{S}(\varphi)$ are consistent with the answers of the ideal cipher $\mathbf{E}(\eta)$. Depending on i, there are three case:

1. when $i = 3$, for each newly generated tuple $(x_1, x_2, x_3, x_{20}, x_{21}) \in G_1 \times G_2 \times G_3 \times G_{20} \times G_{21}$, the simulator computes $k := x_1 \oplus G_2(x_2) \oplus x_3$, $x_0 := x_2 \oplus G_1(x_1) \oplus k$, and $x_{22} := x_{20} \oplus G_{21}(x_{21}) \oplus k$. It then calls an inner procedure $\mathbf{S}(\varphi).Check((x_1, x_0), (x_{22}, x_{21}), k)$, which checks whether $\mathbf{E}(\eta).Enc((x_1, x_0), k) = (x_{22}, x_{21})$ (i.e. $\eta(+, k, (x_1, x_0)) = (x_{22}, x_{21})$) holds, and returns true if so. Whenever this call returns true, the simulator enqueues a 5-tuple $(x_1, x_2, x_3, 1, 6)$ into a queue *ChainQueue*. In the 5-tuple, the 4-th value 1 informs $\mathbf{S}(\varphi)$ that the first value of the tuple is x_1, and the last value 6 informs $\mathbf{S}(\varphi)$ that when completing the chain $(x_1, x_2, x_3, 1)$, it should set entries in G_6 and G_7 to "adapt" the chain and ensure consistency.
2. when $i = 19$, the case is similar to the previous one by symmetry: for each newly generated tuple $(x_1, x_2, x_{19}, x_{20}, x_{21}) \in G_1 \times G_2 \times G_{19} \times G_{20} \times G_{21}$, the simulator computes $k := x_{19} \oplus G_{20}(x_{20}) \oplus x_{21}$, $x_0 := x_2 \oplus G_1(x_1) \oplus k$, $x_{22} := x_{20} \oplus G_{21}(x_{21}) \oplus k$, and $x_3 := x_1 \oplus G_2(x_2) \oplus k$, makes a call to $\mathbf{S}(\varphi).Check((x_1, x_0), (x_{22}, x_{21}), k)$, and enqueues the 5-tuple $(x_1, x_2, x_3, 1, 15)$ into *ChainQueue* whenever this call returns true.
3. when $i \in \{10, 11, 12\}$, for each newly generated tuple $(x_{10}, x_{11}, x_{12}) \in G_{10} \times G_{11} \times G_{12}$, the simulator enqueues the 5-tuple $(x_{10}, x_{11}, x_{12}, 10, l)$ into the queue *ChainQueue*, where $l = 6$ if $i = 10$ or 11, and $l = 15$ if $i = 12$. The sketch of the whole strategy is illustrated in Fig. 2.

After having enqueued the newly generated tuples, $\mathbf{S}(\varphi)$ immediately takes the tuples out of *ChainQueue* and completes the associated partial chains. More clearly, $\mathbf{S}(\varphi)$ maintains a set *CompletedSet* for the chains it has completed. For each chain C dequeued from the queue, if $C \notin CompletedSet$ (i.e. C has not been completed), $\mathbf{S}(\varphi)$ completes it, by evaluating in the corresponding KAF^* computation path both forward and backward (defines the necessary but undefined $G_i(x_i)$ values), and querying $\mathbf{E}.Enc$ or $\mathbf{E}.Dec$ once to "wrap" around, until it reaches the value x_l (when moving forward) and x_{l+1} (when moving backward). Then $\mathbf{S}(\varphi)$ "adapts" the entries by defining $G_l(x_l) := x_{l-1} \oplus x_{l+1} \oplus k$ and $G_{l+1}(x_{l+1}) := x_l \oplus x_{l+2} \oplus k$ to make the entire computation chain consistent with the answers of $\mathbf{E}(\eta)$. This action may overwrite values in G_l or G_{l+1} if $x_l \in G_l$ or $x_{l+1} \in G_{l+1}$ before it happens, however we will show the probability to be negligible. $\mathbf{S}(\varphi)$ then adds $(x_1, x_2, x_3, 1)$ and $(x_{10}, x_{11}, x_{12}, 10)$ to *CompletedSet*, where the two chains correspond to C.

During the completion, the values in G_j newly defined by $\mathbf{S}(\varphi)$ also trigger the chain detection mechanism and chain completion mechanism when $j \in \{3, 10, 11, 12, 19\}$. $\mathbf{S}(\varphi)$ hence keeps dequeuing and completing until $ChainQueue$ is empty again. $\mathbf{S}(\varphi)$ finally returns $G_i(x)$ as the answer to the initial query.

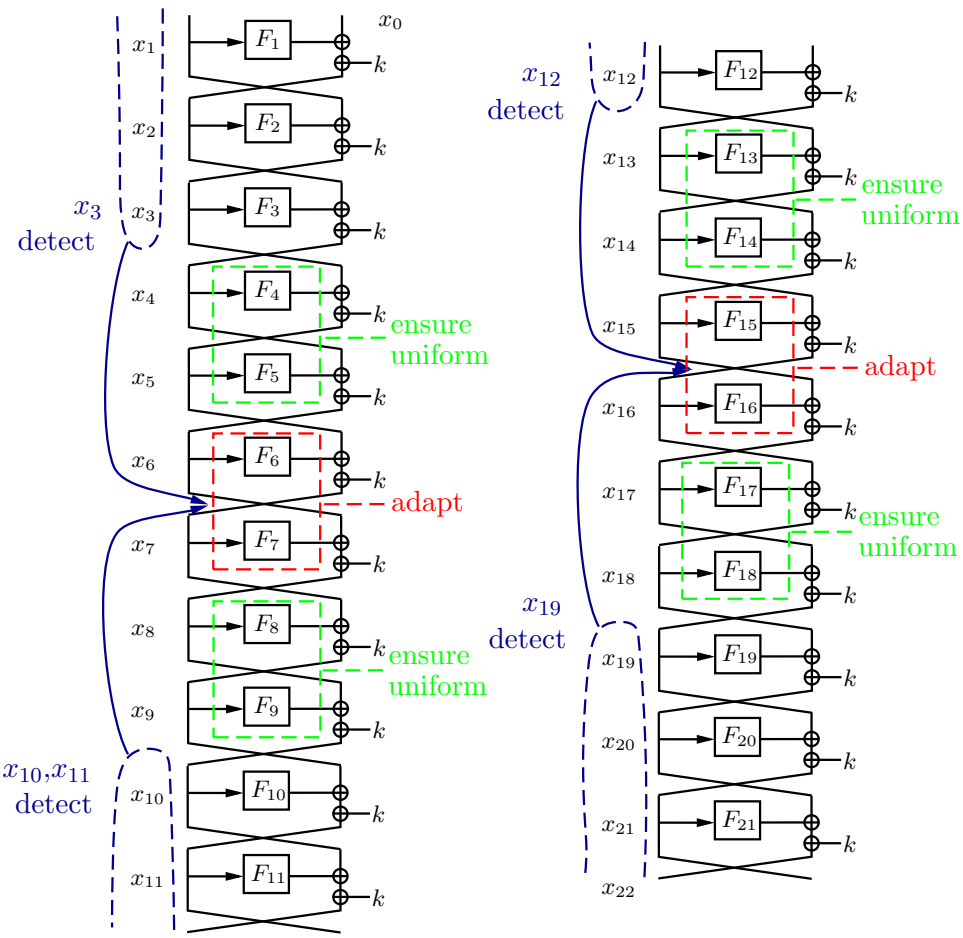

Fig. 2. The 21-round KAF^* cipher with the zones where the simulator detects chains and adapts them.

3.2 Formal Description of the Simulator

A formal description of the simulator $\mathbf{S}(\varphi)$ in pseudocode is presented as follows. A slightly different simulator $\widetilde{S}(\varphi)$ will be introduced later (see Sect. 4.1). For this, some lines of the code of $\mathbf{S}(\varphi)$ will be replaced. The replacements are presented as the boxed statements next to the lines.

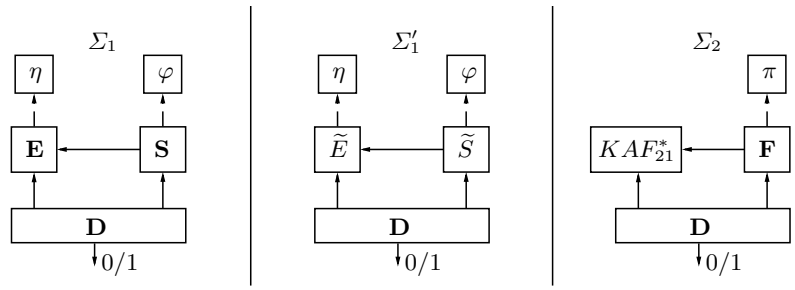

Fig. 3. Systems used in the proof in this paper

Simulator $\mathbf{S}(\varphi)$: | **Simulator** $\widetilde{S}(\varphi)$:

Variables

hash tables $\{G_i\} = (G_1, \ldots, G_{21})$, initially empty

queue *ChainQueue*, initially empty

set *CompletedSet*, initially empty

The procedure $F(i, x)$ provides an interface to the distinguisher.

public procedure $F(i, x)$

$y := F^{inner}(i, x)$

while $ChainQueue \neq \emptyset$ **do**

$(x_j, x_{j+1}, x_{j+2}, j, l) := ChainQueue.Dequeue()$

if $(x_j, x_{j+1}, x_{j+2}, j, l) \notin CompletedSet$ **then** // Complete the chain

$k := x_j \oplus G_{j+1}(x_{j+1}) \oplus x_{j+2}$

$(x_{l-4}, x_{l-3}, x_{l-2}, l-4) := EvalForward(x_j, x_{j+1}, x_{j+2}, j, l-4)$

$(x_{l+3}, x_{l+4}, x_{l+5}, l+3) := EvalBackward(x_j, x_{j+1}, x_{j+2}, j, l+3)$

$Adapt(x_{l-4}, x_{l-3}, x_{l-2}, x_{l+3}, x_{l+4}, x_{l+5}, l)$

$(x_1, x_2, x_3, 1) := EvalForward(x_j, x_{j+1}, x_{j+2}, j, 1)$

$(x_{10}, x_{11}, x_{12}, 10) := EvalForward(x_1, x_2, x_3, 1, 10)$

$CompletedSet := CompletedSet \cup \{(x_1, x_2, x_3, 1), (x_{10}, x_{11}, x_{12}, 10)\}$

return y

The procedure *Adapt* adapts the values by randomly setting the necessary but "missed" entries and then adding entries to G_l and G_{l+1} to make the chain match the computation.

private procedure $Adapt(x_{l-4}, x_{l-3}, x_{l-2}, x_{l+3}, x_{l+4}, x_{l+5}, l)$

$k := x_{l-4} \oplus G_{l-3}(x_{l-3}) \oplus x_{l-2}$

$y_{l-2} := F^{inner}(l-2, x_{l-2})$

$x_{l-1} := x_{l-3} \oplus y_{l-2} \oplus k$

$y_{l-1} := F^{inner}(l-1, x_{l-1})$

$x_l := x_{l-2} \oplus y_{l-1} \oplus k$

$y_{l+3} := F^{inner}(l+3, x_{l+3})$

$x_{l+2} := x_{l+4} \oplus y_{l+3} \oplus k$

$y_{l+2} := F^{inner}(l+2, x_{l+2})$

$x_{l+1} := x_{l+3} \oplus y_{l+2} \oplus k$

$ForceVal(x_l, x_{l-1} \oplus x_{l+1} \oplus k, l)$
$ForceVal(x_{l+1}, x_l \oplus x_{l+2} \oplus k, l+1)$
private procedure $ForceVal(x, y, l)$
$G_l(x) := y$ // May overwrite the entry $G_l(x)$

The procedure F^{inner} draws answers from the table G_i, or the tape φ_i if the answers have not been defined in G_i, and enqueue chains when necessary.

private procedure $F^{inner}(i, x)$
if $x \notin G_i$ **then**
$G_i(x) := \varphi_i(x)$
if $i \in \{3, 10, 11, 12, 19\}$ **then**
$EnqueueNewChains(i, x)$
return $G_i(x)$

Procedure $EnqueueNewChains$ enqueues newly generated partial chains.

private procedure $EnqueueNewChains(i, x)$
if $i = 3$ **then**
for all $(x_1, x_2, x_3, x_{20}, x_{21}) \in G_1 \times G_2 \times \{x\} \times G_{20} \times G_{21}$ **then**
$k := x_1 \oplus G_2(x_2) \oplus x_3$
$chk_pa := ((x_1, G_1(x_1) \oplus x_2 \oplus k), (x_{20} \oplus G_{21}(x_{21}) \oplus k, x_{21}), k)$
$flag := Check(chk_pa)$ $\boxed{flag := \widetilde{E}.Check(chk_pa)}$
if $flag = true$ **then**
$ChainQueue.Enqueue(x_1, x_2, x_3, 1, 6)$
else if $i = 19$ **then**
for all $(x_1, x_2, x_{19}, x_{20}, x_{21}) \in G_1 \times G_2 \times \{x\} \times G_{20} \times G_{21}$ **do**
$k := x_{19} \oplus G_{20}(x_{20}) \oplus x_{21}$
$chk_pa := ((x_1, G_1(x_1) \oplus x_2 \oplus k), (x_{20} \oplus G_{21}(x_{21}) \oplus k, x_{21}), k)$
$flag := Check(chk_pa)$ $\boxed{flag := \widetilde{E}.Check(chk_pa)}$
if $flag = true$ **then**
$x_3 := x_1 \oplus G_2(x_2) \oplus k$
$ChainQueue.Enqueue(x_1, x_2, x_3, 1, 15)$
else if $i = 10$ **then**
for all $(x_{10}, x_{11}, x_{12}) \in \{x\} \times G_{11} \times G_{12}$ **do**
$ChainQueue.Enqueue(x_{10}, x_{11}, x_{12}, 10, 6)$
else if $i = 11$ **then**
for all $(x_{10}, x_{11}, x_{12}) \in G_{10} \times \{x\} \times G_{12}$ **do**
$ChainQueue.Enqueue(x_{10}, x_{11}, x_{12}, 10, 6)$
else if $i = 12$ **then**
for all $(x_{10}, x_{11}, x_{12}) \in G_{10} \times G_{11} \times \{x\}$ **do**
$ChainQueue.Enqueue(x_{10}, x_{11}, x_{12}, 10, 15)$

The $Check$ procedure queries $\mathbf{E}$ to verify whether the inputs are valid pairs of plaintext and ciphertext of $\mathbf{E}$. Note that $\widetilde{S}$ does not own $Check$ procedure; instead $\widetilde{S}$ calls the $Check$ procedure of a modified cipher $\widetilde{E}$, as described in the boxed statements in the code section before.

private procedure $Check(x, y, k)$ // $\widetilde{S}$ does not own such a procedure
return $\mathbf{E}.Enc(x, k) = y$

The procedures $EvalForward$ (and $EvalBackward$, resp.) takes a partial chain $(x_j, x_{j+1}, x_{j+2}, j)$ as input, and evaluate forward (and backward, resp.) in KAF^* until obtaining the tuple (x_l, x_{l+1}, x_{l+2}) of input values for G_l, G_{l+1}, and G_{l+2} for specified l.

private procedure $EvalForward(x_j, x_{j+1}, x_{j+2}, j, l)$
  $k := x_j \oplus G_{j+1}(x_{j+1}) \oplus x_{j+2}$ // By construction $x_{j+1} \in G_{j+1}$ holds
  while $j \neq l$ **do**
    if $j = 20$ **then**
      $(x_1, x_0) := \mathbf{E}.Dec((x_{22}, x_{21}), k)$ $\boxed{(x_1, x_0) := \widetilde{E}.Dec((x_{22}, x_{21}), k)}$
      $x_3 := x_0 \oplus F^{inner}(1, x_1) \oplus k$
      $j := 0$
    else
      $x_{j+3} := x_{j+1} \oplus F^{inner}(j+2, x_{j+2}) \oplus k$
      $j := j + 1$
  return $(x_l, x_{l+1}, x_{l+2}, l)$
private procedure $EvalBackward(x_j, x_{j+1}, x_{j+2}, j, l)$
  $k := x_j \oplus G_{j+1}(x_{j+1}) \oplus x_{j+2}$
  while $j \neq l$ **do**
    if $j = 0$ **then**
      $(x_{22}, x_{21}) := \mathbf{E}.Enc((x_1, x_0), k)$ $\boxed{(x_{22}, x_{21}) := \widetilde{E}.Enc((x_1, x_0), k)}$
      $x_{20} := x_{22} \oplus F^{inner}(21, x_{21}) \oplus k$
      $j := 20$
    else
      $x_{j-1} := x_{j+1} \oplus F^{inner}(j, x_j) \oplus k$
      $j := j - 1$
  return $(x_l, x_{l+1}, x_{l+2}, l)$

4 Proof of the Indifferentiability

For any fixed, deterministic, and computationally unbounded distinguisher $\mathbf{D}$, we show the following two to establish the indifferentiability:

(i) The two systems $\Sigma_1(\mathbf{E}(\eta), \mathbf{S}(\varphi))$ and $\Sigma_2(KAF^*_{21}, \mathbf{F}(\pi))$ are indistinguishable.
(ii) The probability that $\mathbf{S}(\varphi)$ runs in polynomial time is overwhelming.

4.1 Intermediate System Σ_1', and Proof Sketch

For further simplicity, we introduce an intermediate system $\Sigma_1'(\widetilde{E}(\eta), \widetilde{S}(\varphi))$, which consists of a modified ideal cipher $\widetilde{E}(\eta)$ and a slightly modified simulator $\widetilde{S}(\varphi)$. $\widetilde{E}(\eta)$ maintains a table E, which contains entries of the form $((+, k, x), y)$ and $((-, k, y), x)$. $\widetilde{E}(\eta)$ provides an additional interface $Check(x, y, k)$. Once being queried on $Enc(x, k)$ or $Dec(y, k)$, $\widetilde{E}(\eta)$ adds the corresponding entries of η to E and returns them as answers. Once being called on $Check(x, y, k)$, $\widetilde{E}(\eta)$

looks in the table E to check whether $E(+,k,x) = y$ and returns the answer. More clearly, $\widetilde{E}(\eta)$ is implemented as follows:

```
Modified ideal cipher Ẽ(η):
Variables
    hash table E, initially empty
end variables
public procedure Enc(x, k)
    if (+, k, x) ∉ E then
        y := η(+, k, x)
        E(+, k, x) := y
        E(−, k, y) := x
    end if
    return E(+, k, x)
end procedure
public procedure Dec(y, k)
    if (−, k, y) ∉ E then
        x := η(−, k, y)
        E(−, k, y) := x
        E(+, k, x) := y
    end if
    return E(−, k, y)
end procedure
public procedure Check(x, y, k)
    if (+, k, x) ∈ E then
        return E(+, k, x) = y
    else
        return false
    end if
end procedure
```

By construction and the fact that η encodes an ideal cipher, it can be easily seen that $\widetilde{E}(\eta).E$ always defines a partial cipher before or after any call to *Enc* or *Dec*, i.e. for all $k, x, y \in \{0,1\}^n$, $(+,k,x) \in \widetilde{E}(\eta).E$ and $\widetilde{E}(\eta).E(+,k,x) = y$ iff. $(-,k,y) \in \widetilde{E}(\eta).E$ and $\widetilde{E}(\eta).E(-,k,y) = x$. We use $|\widetilde{E}(\eta).E^+|$ and $|\widetilde{E}(\eta).E^-|$ to denote the number of entries in $\widetilde{E}(\eta).E$ of form $((+,\cdot,\cdot),\cdot)$ and $((-,\cdot,\cdot),\cdot)$ respectively. By above, $|\widetilde{E}(\eta).E| = 2 \cdot |\widetilde{E}(\eta).E^+| = 2 \cdot |\widetilde{E}(\eta).E^-|$ holds at any point when every call to *Enc* or *Dec* has been answered.

On the other hand, the differences between $\widetilde{S}(\varphi)$ and $\mathbf{S}(\varphi)$ (in Σ_1) are captured by the boxed statements in the pseudo codes in Sect. 3.2. They mainly consist of two aspects:

- the cipher they query: $\widetilde{S}(\varphi)$ queries $\widetilde{E}(\eta)$ while $\mathbf{S}$ queries $\mathbf{E}(\eta)$;
- the owner of the *Check* procedure: $\widetilde{S}(\varphi)$ calls $\widetilde{E}(\eta).Check$ while $\mathbf{S}(\varphi)$ calls $\mathbf{S}(\varphi).Check$;

The three systems are depicted in Fig. 3. For simplicity we introduce several additional notations, namely $\Sigma_1^{'}(\alpha)$, $\Sigma_1^{'}(\eta,\varphi)$, and $\Sigma_2(\pi)$. $\Sigma_1^{'}(\alpha)$ and $\Sigma_1^{'}(\eta,\varphi)$ are short for $\Sigma_1(\widetilde{E}(\eta),\widetilde{S}(\varphi))$, while $\Sigma_2(\pi)$ is short for $\Sigma_2(KAF_{21}^{*},\mathbf{F}(\pi))$.

Then the proof of indifferentiability is divided into two stages:

- First, we specify bad events in the *Check* procedure in Σ_1, which capture the essential differences between Σ_1 and $\Sigma_1^{'}$. Then for any distinguisher which issues at most q queries, we upper bound the probability of the bad events to $\frac{2^{19}\cdot q^{15}}{2^{2n}}$ (in the proof of Lemma 5); and upper bound the advantage of distinguishing Σ_1 and $\Sigma_1^{'}$ to $\frac{2^{19}\cdot q^{15}}{2^{2n}}$ (Lemma 5) and the complexity of $\mathbf{S}$ in Σ_1 to no more than $2\cdot(10q^3)^3 \leq 2^{11}\cdot q^9$ queries (Lemma 6).
- Second, we specify bad events relevant to *ForceVal* procedure overwriting entries, bound the probability of such events, and finally use a *relaxed randomness mapping argument* to upper bound the advantage of distinguishing $\Sigma_1^{'}$ and Σ_2 to $\frac{2^{222}\cdot q^{30}}{2^n}+\frac{2^{34}\cdot q^6}{2^{2n}}$ (Lemma 25).

Gathering these results yields Theorem 1.

4.2 Bounding the Complexity of $\widetilde{S}(\varphi)$ in $\Sigma_1^{'}$

In this section we show that the simulator $\widetilde{S}(\varphi)$ in $\Sigma_1^{'}$ runs in polynomial time. The underlying principle is similar to [13] and [17].

Lemma 1. *During any execution* $\mathbf{D}^{\Sigma_1^{'}(\widetilde{E}(\eta),\widetilde{S}(\varphi))}$*, after the q-th query made by* $\mathbf{D}$ *is answered,* $\widetilde{S}(\varphi)$ *dequeues at most q times a partial chain of the form* $(x_1,x_2,x_3,1,l)$ *for which* $(x_1,x_2,x_3,1)\notin CompletedSet$*.*

Proof. We will show that each such dequeuing action corresponds to a distinct call to $\widetilde{E}(\eta).Enc(x,k)$ or $\widetilde{E}(\eta).Dec(y,k)$ previously made by $\mathbf{D}$.

Consider such a dequeuing action and let $(x_1,x_2,x_3,1,l)$ be the partial chain dequeued for which $(x_1,x_2,x_3,1)\notin CompletedSet$. By construction, a chain $(x_1,x_2,x_3,1,l)$ is enqueued only when $(x_1,x_2,x_3,x_{20},x_{21})$ or $(x_1,x_2,x_{19},x_{20},x_{21})$ is detected and the call $\widetilde{E}(\eta).Check((x_1,x_0),(x_{22},x_{21}),k)$ returns true – the latter happens only when a pair of entries $(((+,k,(x_1,x_0)),(x_{22},x_{21})),((-,k,(x_{22},x_{21})),(x_1,x_0)))$ has been in $\widetilde{E}(\eta).E$. On the other hand, if two chains C and C' dequeued correspond to the same call to $\widetilde{E}(\eta).Check$, then we must have $C=C'$, C will be added to *CompletedSet* since its first completion, and it will not be $C\notin CompletedSet$ when it is dequeued again. Hence each such dequeuing action corresponds to a unique pair of entries $(((+,k,x),y),((-,k,y),x))$ in $\widetilde{E}(\eta).E$. This pair must have been added by a query issued by $\mathbf{D}$, since $\widetilde{S}(\varphi)$ makes such calls only when it is completing a chain, and after this completion, the chain $(x_1,x_2,x_3,1)$ will be added into *CompletedSet*, and it cannot be $(x_1,x_2,x_3,1)\notin CompletedSet$ when it is dequeued again.

Hence, each such dequeuing action corresponds to a call to $\widetilde{E}(\eta).Enc$ or $\widetilde{E}(\eta).Dec$ made by $\mathbf{D}$, and cannot occur more than q times. □

Lemma 2. *During any execution* $\mathbf{D}^{\Sigma_1(\widetilde{E}(\eta),\widetilde{S}(\varphi))}$*, after the* q*-th query made by* $\mathbf{D}$ *is answered:*

- *for* $i \in \{1, 2, \ldots, 21\}$ *and* $\delta \in \{+, -\}$*,* $|G_i| \leq 10q^3$*, and* $|\widetilde{E}.E^\delta| \leq 10q^3$*;*
- $\widetilde{S}$ *issues at most* $2 \cdot (10q^3)^5$ *queries to* $\widetilde{E}.Check$*;*

Proof. The proof is similar to Lemma 2 in [17], while the results are different.

First, $|G_{10}|$, $|G_{11}|$, and $|G_{12}|$ are at most $2q$: entries can only be added to these three tables when $\mathbf{D}$ issues a query to $F(i, x)$ with $i = 10$, 11, or 12, or when $\widetilde{S}$ completes a chain $(x_1, x_2, x_3, 1, l)$. The former occurs at most q times, while the latter occurs at most q times by Lemma 1, hence the bound is $2q$, and $\widetilde{S}$ completes at most $|G_{10}| \cdot |G_{11}| \cdot |G_{12}| \leq 8q^3$ chains of form $(x_{10}, x_{11}, x_{12}, 10, l)$.

Second, for any $i \in \{1, \ldots, 21\}$, $|G_i|$ can only be enlarged by at most 1 when: the distinguisher calls $\widetilde{S}.F(i, x)$; a chain $(x_1, x_2, x_3, 1, l)$ is completed; or a chain $(x_{10}, x_{11}, x_{12}, 10, l)$ is completed. The first case occurs at most q times, the second at most q times, while the last at most $8q^3$ times. Hence in total the bound is $2q + 8q^3 \leq 10q^3$.

Then, by construction, each query to either $\widetilde{E}.Enc$ or $\widetilde{E}.Dec$ increases both $|\widetilde{E}.E^+|$ and $|\widetilde{E}.E^-|$ by at most 1. Such queries may be issued by $\mathbf{D}$ or $\widetilde{S}$. The former is at most q, while the latter only happens during completion of a chain, thus at most $q + 8q^3$. Hence the bound is $q + q + (8q^3) \leq 10q^3$. Finally, the number of queries to $\widetilde{E}.Check$ made by $\widetilde{S}(\varphi)$ is bounded by $|G_1| \cdot |G_2| \cdot |G_3| \cdot |G_{20}| \cdot |G_{21}| + |G_1| \cdot |G_2| \cdot |G_{19}| \cdot |G_{20}| \cdot |G_{21}| \leq 2 \cdot (10q^3)^5$. □

4.3 Indistinguishability of Σ_1 and Σ_1'

The proof of indistinguishability of Σ_1 and Σ_1' is presented in this section. It consists of specifying the bad events in Σ_1, showing the two systems to have exactly same behaviors given that the bad events do not happen, and upper bounding the complexity of $\mathbf{S}$ in Σ_1.

Bad Event BadCheck Since we have made the randomness taken by Σ_1 explicit, the only essential difference between Σ_1 and Σ_1' lies in the $Check$ procedure: for a call $Check(x, y, k)$, in Σ_1' the answer depends on $\widetilde{E}(\eta).E$, while in Σ_1 the answer depends on a much larger table η. For this, we define a bad event **BadCheck**: consider a pair of random tapes (η, φ), **BadCheck** happens during the execution $\mathbf{D}^{\Sigma_1(\mathbf{E}(\eta),\mathbf{S}(\varphi))}$ if $\exists(x, y, k)$ s.t. all the following hold:

(i) $\mathbf{S}(\varphi)$ makes a call $Check(x, y, k)$;
(ii) $\eta(+, k, x) = y$.
(iii) Before the call in (i), neither $\mathbf{E}(\eta).Enc(x, k)$ nor $\mathbf{E}(\eta).Dec(y, k)$ has been issued.

Note that such a call $Check(x, y, k)$ returns true if being made in $\Sigma_1(\mathbf{E}(\eta), \mathbf{S}(\varphi))$, while returns false if being made in $\Sigma_1'(\widetilde{E}(\eta), \widetilde{S}(\varphi))$; this is the main idea of **BadCheck**. We now bound the probability that **BadCheck** happens in a *fixed number* of calls to $\mathbf{S}(\varphi).Check$.

Lemma 3. *Fix a point in* $\mathbf{D}^{\Sigma_1(\mathbf{E}(\eta),\mathbf{S}(\varphi))}$. *Suppose* $\mathbf{S}(\varphi).Check$ *is called* q_1' *times, while* $\mathbf{E}(\eta).Enc$ *and* $\mathbf{E}(\eta).Dec$ *are queried* $q_2' < \frac{2^{2n}}{2}$ *times in total up to this point. Then the probability that* **BadCheck** *happens before this point is upper bounded to* $\frac{2q_1'}{2^{2n}}$.

Proof. Consider a call $\mathbf{S}(\varphi).Check(x, y, k)$. Since neither $\mathbf{E}(\eta).Enc(x, k)$ nor $\mathbf{E}(\eta).Dec(y, k)$ has been issued before this call, y is a $2n$-bit "fresh" value. Since η encodes a random permutation for each k, we have $Pr[\eta(+, k, x) = y] \leq \frac{1}{2^{2n}-q_2'}$. And since the number of queries to $Check$ is at most q_1', in total the probability is $\frac{q_1'}{2^{2n}-q_2'}$. Given $q_2' < \frac{2^{2n}}{2}$, we have $Pr[\mathbf{BadCheck}] \leq \frac{2 \cdot q_1'}{2^{2n}}$. □

Σ_1 with No BadCheck in the First $2 \cdot (10q^3)^5$ Calls to *Check*: Indistinguishable from Σ_1' Consider $\Sigma_1(\mathbf{E}(\eta), \mathbf{S}(\varphi))$. Instead of the $Check$ procedure in $\mathbf{S}(\varphi)$, we can imagine that $\mathbf{E}(\eta)$ has a procedure which is implemented exactly as $\mathbf{S}(\varphi)$, and at line 45 and line 52, $\mathbf{S}(\varphi)$ calls $\mathbf{E}(\eta).Check$ instead of $\mathbf{S}(\varphi).Check$. This "imagined" $\mathbf{S}_{img}(\varphi)$ (can be obtained by excluding the implementation of $Check$ from $\mathbf{S}(\varphi)$) are the same as $\widetilde{S}(\varphi)$ except that they query different ciphers. By this, for the two systems $(\mathbf{D}, \mathbf{S}_{img}(\varphi))$ and $(\mathbf{D}, \widetilde{S}(\varphi))$, if all the return values of the procedures Enc, Dec, F, and $Check$ equal correspondingly, then they two will have the same behaviors.

To capture this, we use the notion transcript. Back to the Σ_1-executions. For $\mathbf{D}^{\Sigma_1(\mathbf{E}(\eta),\mathbf{S}(\varphi))}$, the *transcript* is a sequence composed of all the following query answer pairs generated during the execution:

(i) all the Dec, $Check$, and F queries issued by $\mathbf{D}$ and $\mathbf{S}(\varphi)$, and the corresponding answers;
(ii) all the Enc queries issued outside the $Check$ procedure by $\mathbf{D}$ and $\mathbf{S}(\varphi)$ (note that in the "imagined" system, the Enc queries issued inside the $Check$ procedure are made by the imagined cipher $\mathbf{E}(\eta)$, not by $\mathbf{S}_{img}(\varphi)$), and the corresponding answers;

and $Transcript(\cdot, \cdot)$ is the function which extracts such transcript. More clearly,

$$t = Transcript(\mathbf{D}, \Sigma_1(\mathbf{E}(\eta), \mathbf{S}(\varphi))) = (qa_1, qa_2, \ldots),$$

for each i, qa_i is a 3-tuple $(procedure, query, answer)$ where $procedure \in \{Enc, Dec, F, Check\}$ denotes the procedure being called, while $query$ and $answer$ denote the corresponding query-answer pair.

While for $\mathbf{D}^{\Sigma_1'(\widetilde{E}(\eta),\widetilde{S}(\varphi))}$, the *transcript* is a sequence composed of all the query-answer pairs generated by $\mathbf{D}$ and $\widetilde{S}$ during the execution, and $Transcript(\cdot, \cdot)$ is the function which extracts such transcript

$$t' = Transcript(\mathbf{D}, \Sigma_1'(\widetilde{E}(\eta), \widetilde{S}(\varphi))) = (qa_1', qa_2', \ldots).$$

For a finite transcript t, the *length* is the number of tuples in it, i.e. if $t = (qa_1, \ldots, qa_l)$, then the length of t is l. For t, its *partial transcript* t_j is defined

as the first j tuples, namely $t_j = (qa_1, qa_2, \ldots, qa_j)$[4]; similarly for $t_j^{'}$. For a transcript t with length l, denote $qa_i = \perp$, for any $i > l$.

By discussions above, there is a deterministic function Q_A that takes the partial transcript (attained so far) as input and returns the next query that will appear in $\mathbf{D}^{\Sigma_1(\mathbf{E}(\eta),\mathbf{S}(\varphi))}$ (excluding the queries to $\mathbf{E}(\eta).Enc$ issued inside the procedure $\mathbf{S}(\varphi).Check$); similarly, a deterministic function Q'_A for $\mathbf{D}^{\Sigma_1^{'}(\widetilde{E}(\eta),\widetilde{S}(\varphi))}$. Since $\mathbf{S}$ and $\widetilde{S}$ are same except for the objects they query, $Q_A = Q'_A$; hence we will only use notation Q_A. Define $Q_A(t_l)$ as $\perp$, if qa_l is the last tuple of t. Clearly $Q_A(t_l) = \perp$ if and only if the length of t is l.

Then we have the following lemma claiming that the transcripts of $\mathbf{D}^{\Sigma_1(\mathbf{E}(\eta),\mathbf{S}(\varphi))}$ and $\mathbf{D}^{\Sigma_1^{'}(\widetilde{E}(\eta),\widetilde{S}(\varphi))}$ are equal if in $\mathbf{D}^{\Sigma_1(\mathbf{E}(\eta),\mathbf{S}(\varphi))}$, **BadCheck** does not happen in a sufficiently long period. This lemma is the core of this section.

Lemma 4. *Consider two executions* $\mathbf{D}^{\Sigma_1(\mathbf{E}(\eta),\mathbf{S}(\varphi))}$ *and* $\mathbf{D}^{\Sigma_1^{'}(\widetilde{E}(\eta),\widetilde{S}(\varphi))}$. *Let* $t = Transcript(\mathbf{D}, \Sigma_1(\mathbf{E}(\eta), \mathbf{S}(\varphi)))$, $t^{'} = Transcript(\mathbf{D}, \Sigma_1^{'}(\widetilde{E}(\eta), \widetilde{S}(\varphi)))$, *and suppose* $\widetilde{E}(\eta).Check$ *receives* N *calls during* $\mathbf{D}^{\Sigma_1^{'}(\widetilde{E}(\eta),\widetilde{S}(\varphi))}$. *Then if* **BadCheck** *does not happen in the first* N *calls to* $\mathbf{S}(\varphi).Check$ *during* $\mathbf{D}^{\Sigma_1(\mathbf{E}(\eta),\mathbf{S}(\varphi))}$, *we have:*

(i) $t = t^{'}$;
(ii) $\mathbf{D}^{\Sigma_1(\mathbf{E}(\eta),\mathbf{S}(\varphi))} = \mathbf{D}^{\Sigma_1^{'}(\widetilde{E}(\eta),\widetilde{S}(\varphi))}$;

Proof. By Lemma 2 we know the length of $t^{'}$ is finite; suppose it to be l. For proposition (i), towards a contradiction assume $t \neq t^{'}$, then there must exist $1 \leq j \leq l$ s.t. $qa_i \neq qa_i^{'}$ (qa_i may be $\perp$, when the length of t is less than l). However this is impossible: suppose j to be the smallest value such that $qa_j \neq qa_j^{'}$. Then $t_{j-1} = t_{j-1}^{'}$ and $Q_A(t_{j-1}) = Q_A(t_{j-1}^{'})$, which means that the *procedure* fields and *query* fields of qa_j and $qa_j^{'}$ equal correspondingly (it might be $qa_j = qa_j^{'} = \perp$, however we have assumed them to be not equal). We show the *answer* fields of them two to be equal to contradict the assumption. We distinguish the following cases depending on the *procedure* field:

- if the *procedure* field is *Enc* or *Dec*, then clearly $qa_j = qa_j^{'}$ since $\mathbf{E}$ and $\widetilde{E}$ draw randomness from the same source.
- if the *procedure* field is *Check*, then by the assumptions that $\widetilde{E}.Check$ receives N calls during $\mathbf{D}^{\Sigma_1^{'}(\widetilde{E}(\eta),\widetilde{S}(\varphi))}$ and **BadCheck** does not occur in the first N calls to $\mathbf{S}(\varphi).Check$ during $\mathbf{D}^{\Sigma_1(\mathbf{E}(\eta),\mathbf{S}(\varphi))}$, $qa_j = qa_j^{'}$.
- if the *procedure* field of qa_j and $qa_j^{'}$ items is F, then:
  - if the answers are simply drawn from the tapes, then clearly $qa_j = qa_j^{'}$;
  - if the answers are obtained through adaptations during completions of some chains, then the answers depend on previous return values of *Check* and previous answers to *Enc*, *Dec*, and F. Then the first "adapted answers" are equal since all the previous query-answer pairs are equal by discussions above, and by an induction we know $qa_j = qa_j^{'}$ for any such "adapted answers".

[4] Do not confuse t_j with qa_j.

These establish $qa_j = qa_j^{'}$ for any $1 \leq j \leq l$. Hence $t_l = t_l^{'}$, $Q_A(t_l) = Q_A(t_l^{'}) = \perp$, the length of t is also l, and $t = t^{'}$. This implies proposition (ii) trivially. □

Lemma 5. *For any distinguisher* $\mathbf{D}$ *which issues no more than* q *queries, we have:*

$$|Pr[D^{\Sigma_1(\mathbf{E}(\eta),\mathbf{S}(\varphi))} = 1] - Pr[D^{\Sigma_1^{'}(\widetilde{E}(\eta),\widetilde{S}(\varphi))} = 1]| \leq \frac{2^{19} \cdot q^{15}}{2^{2n}}.$$

Proof. Consider the pair (η, φ). By Lemma 2 we know $\widetilde{E}(\eta).Check$ receives no more than $2 \cdot (10q^3)^5$ calls in $\Sigma_1^{'}(\widetilde{E}(\eta), \widetilde{S}(\varphi))$, by Lemma 3 we know the probability that **BadCheck** occurs in these calls is no more than

$$\frac{2q_1^{'}}{2^{2n}} = \frac{2 \cdot 2 \cdot (10q^3)^5}{2^{2n}} \leq \frac{2^{19} \cdot q^{15}}{2^{2n}}$$

and by Lemma 4 we know if **BadCheck** does not occur in all these calls, $D^{\Sigma_1(\mathbf{E}(\eta),\mathbf{S}(\varphi))} = D^{\Sigma_1^{'}(\widetilde{E}(\eta),\widetilde{S}(\varphi))}$. Hence

$$\begin{aligned}
&|Pr[D^{\Sigma_1(\mathbf{E}(\eta),\mathbf{S}(\varphi))} = 1] - Pr[D^{\Sigma_1^{'}(\widetilde{E}(\eta),\widetilde{S}(\varphi))} = 1]| \\
\leq &|Pr_{(\eta,\varphi)}[D^{\Sigma_1(\eta,\varphi)} = 1 \wedge \textbf{BadCheck}\ \textit{occurs during}\ D^{\Sigma_1(\mathbf{E}(\eta),\mathbf{S}(\varphi))}] \\
&- Pr_{(\eta,\varphi)}[D^{\Sigma_1^{'}(\eta,\varphi)} = 1 \wedge \textbf{BadCheck}\ \textit{occurs during}\ D^{\Sigma_1(\mathbf{E}(\eta),\mathbf{S}(\varphi))}]| \\
&+ |Pr_{(\eta,\varphi)}[D^{\Sigma_1(\eta,\varphi)} = 1 \wedge \textbf{BadCheck}\ \textit{does not occur during}\ D^{\Sigma_1(\mathbf{E}(\eta),\mathbf{S}(\varphi))}] \\
&- Pr_{(\eta,\varphi)}[D^{\Sigma_1^{'}(\eta,\varphi)} = 1 \wedge \textbf{BadCheck}\ \textit{does not occur during}\ D^{\Sigma_1(\mathbf{E}(\eta),\mathbf{S}(\varphi))}]| \\
= &Pr_{(\eta,\varphi)}[\textbf{BadCheck}\ \textit{occurs during}\ D^{\Sigma_1(\mathbf{E}(\eta),\mathbf{S}(\varphi))}] \cdot |Pr[D^{\Sigma_1} = 1] - Pr[D^{\Sigma_1^{'}} = 1]| \\
\leq &Pr_{(\eta,\varphi)}[\textbf{BadCheck}\ \textit{occurs during}\ D^{\Sigma_1(\mathbf{E}(\eta),\mathbf{S}(\varphi))}] \\
\leq &\frac{2^{19} \cdot q^{15}}{2^{2n}}
\end{aligned}$$

as claimed. □

Bounding the Complexity of S The discussions above enable us to upper bound the complexity of $\mathbf{S}$ in $\Sigma_1(\mathbf{E}(\eta), \mathbf{S}(\varphi))$ for most cases.

Lemma 6. *For any distinguisher* $\mathbf{D}$ *which issues no more than* q *queries, with probability no less than* $1 - \frac{2^{19} \cdot q^{15}}{2^{2n}}$, $\mathbf{S}(\varphi)$ *issues no more than* $2^{11} \cdot q^9$ *queries to* $\mathbf{E}(\eta)$ *during execution* $\mathbf{D}^{\Sigma_1(\mathbf{E}(\eta),\mathbf{S}(\varphi))}$.

Proof. $\mathbf{S}(\varphi)$ issues at most $|G_1| \cdot |G_2| \cdot |G_3| + |G_{19}| \cdot |G_{20}| \cdot |G_{21}|$ queries to $\mathbf{E}(\eta)$. By Lemma 4, $Transcript(\mathbf{D}, \Sigma_1(\mathbf{E}(\eta), \mathbf{S}(\varphi))) = Transcript(\mathbf{D}, \Sigma_1^{'}(\widetilde{E}(\eta), \widetilde{S}(\varphi)))$ holds with probability at least $1 - \frac{2^{19} \cdot q^{15}}{2^{2n}}$; this implies that with probability no less than $1 - \frac{2^{19} \cdot q^{15}}{2^{2n}}$, the bounds on the size of the tables (Lemma 2) holds in $\mathbf{D}^{\Sigma_1(\mathbf{E}(\eta),\mathbf{S}(\varphi))}$. Therefore the bound is $2 \cdot (10q^3)^3 \leq 2^{11} \cdot q^9$. □

4.4 Indistinguishability of $\Sigma_1^{'}$ and Σ_2

In this section we use a relaxed randomness mapping argument to upper bound the advantage of distinguishing $\Sigma_1^{'}$ and Σ_2. We recall the principle first.

Relaxed Randomness Mapping Argument: Principle Since $\mathbf{D}$ is deterministic, each tuple of random tapes (η, φ) uniquely determines a $\Sigma_1^{'}$-execution. However during $\mathbf{D}^{\Sigma_1^{'}(\eta,\varphi)}$, certain entries in (η, φ) may not be accessed and will not affect the execution. The entries of (η, φ) accessed during $\mathbf{D}^{\Sigma_1^{'}(\eta,\varphi)}$ compose *footprint* (see Sect. 4.4 for a more formal definition). Hence there is a bijection between the possible value of the footprint and the transcript of $\mathbf{D}^{\Sigma_1^{'}(\eta,\varphi)}$.

Then the core idea of upper bounding $Pr[\mathbf{D}^{\Sigma_2} = 1] - Pr[\mathbf{D}^{\Sigma_1^{'}} = 1]$ by relaxed randomness mapping argument is exhibiting a bijection τ between some of the footprints of (η, φ) and π such that (i) τ maps $\Sigma_1^{'}$ executions to Σ_2 executions that look exactly same from the viewpoint of $\mathbf{D}$; (ii) τ maps $\Sigma_1^{'}$ executions to Σ_2 executions of nearly equal probability; (iii) the domain of τ represents most of the probability mass of all the possible footprints of $\mathbf{D}^{\Sigma_1^{'}(\eta,\varphi)}$. A difference between our argument and the previous work[2] is, in the previous work, the images of the map are all footprints of the tapes used in the target system (G_3, in [2]), while in our argument, the range of the map is merely a subset of the partial tapes used in the second system.

Following the above, we first specify the domain of the map, then define the map and complete the proof.

Specifying the Domain: Bad Event BadHit To specify the domain of the map, we shall be aware of which tapes (η, φ) are able to induce executions same as those induced by π (from the viewpoint of $\mathbf{D}$). We note that the difference between $\Sigma_1^{'}(\widetilde{E}(\eta), \widetilde{S}(\varphi))$ and $\Sigma_2(KAF_{21}^{*}, \mathbf{F}(\pi))$ lies in the fact that during $\mathbf{D}^{\Sigma_2(KAF_{21}^{*}, \mathbf{F}(\pi))}$ the answers obtained from KAF_{21}^{*} and $\mathbf{F}(\pi)$ are always consistent, while those obtained during $\Sigma_1^{'}(\widetilde{E}(\eta), \widetilde{S}(\varphi))$ might be inconsistent, and force $\widetilde{S}(\varphi)$ to overwrite entries in tables. We define a bad event **BadHit** and upper bound the probability, then show that during an execution $\Sigma_1^{'}(\widetilde{E}(\eta), \widetilde{S}(\varphi))$, $\widetilde{S}(\varphi)$ will not overwrite any entry if **BadHit** does not happen. The footprints of the random tapes inducing such executions (during which **BadHit** does not happen) will be taken as the domain of the map.

We take the methodology introduced by Lampe *et. al*[17]. For each random tape accessing action in $\Sigma_1^{'}(\widetilde{E}(\eta), \widetilde{S}(\varphi))$, we define the history $\mathcal{H}$ as the set of all n-bit strings extracted from the entries in the table $\widetilde{E}(\eta).E$ and $\{G_i\}$ just before this action. More clearly:

- In table $\widetilde{E}(\eta).E$, for any entry $((\cdot, k, x), y)$, $\mathcal{H}$ includes five n-bit values k, x_L, x_R, y_L, y_R, where x_L and x_R (y_L and y_R) are the left and right n-bit halves of x (y, resp.).

– For each $i \in \{1, \ldots, 21\}$, for any entry (x, y) in G_i, $\mathcal{H}$ includes two n-bit values x and y.
– The parameters passed to the calls which triggers the random tape accessing actions are also included, i.e. for calls to $G_i(x)$, x is included in $\mathcal{H}$ immediately after the call is made, while for calls to $\widetilde{E}.Enc(m, k)$ (and $Dec(m, k)$), k, m_L, and m_R are all included in $\mathcal{H}$ immediately after the call is made, where m_L and m_R are the left and right n-bit halves of m.

Then we define the bad event:

Definition 2. *The bad event* **BadHit** *occurs if when the simulator read an entry from the random tape, either of the following two happens:*

– *If the entry $x = (x_L, x_R)$ is a $2n$-bit value read from η, then either x_L or x_R equals the bitwise xor of 9 or less values in the history $\mathcal{H}$;*
– *If the entry y is an n-bit value read from φ, then y is equal to the bitwise xor of 9 or less values in $\mathcal{H}$.*

Probability of **BadHit** Based on the upper bounds on the size of the tables in $\Sigma_1'(\widetilde{E}(\eta), \widetilde{S}(\varphi))$, we upper bound the probability of **BadHit**.

Lemma 7. *For any distinguisher* $\mathbf{D}$ *which issues at most q queries, the probability (over the random choice of η and φ) that event* **BadHit** *happens in* $\mathbf{D}^{\Sigma_1'(\widetilde{E}(\eta), \widetilde{S}(\varphi))}$ *can be upper bounded as*

$$Pr[\mathbf{BadHit}] \leq \frac{2^{88} \cdot q^{30}}{2^n}$$

Proof. According to Lemma 2, $|\widetilde{E}(\eta).E^+| \leq 10q^3$, and $|G_i| \leq 10q^3$. By definition of $\mathcal{H}$, each entry of $\widetilde{E}(\eta).E^+$ adds 5 values to $\mathcal{H}$[5], while each entry of G_i adds 2 values. Hence $|\mathcal{H}| \leq 5 \cdot 10q^3 + 2 \cdot 21 \cdot 10q^3 = 470q^3$. Then:

– for each query to F_i which triggers φ_i tape accessing action, since values in φ_i are random, the probability that **BadHit** occurs is at most $\frac{(470q^3)^9}{2^n}$;
– for each query to $\widetilde{E}(\eta).Enc$ or $\widetilde{E}(\eta).Dec$ which triggers η tape accessing action, since η encodes an ideal cipher, the probability that **BadHit** occurs is at most $Pr[y_L \xleftarrow{\$} \{0,1\}^n : \mathbf{BadHit}$ *occurs on* $y_L] + Pr[y_R \xleftarrow{\$} \{0,1\}^n : \mathbf{BadHit}$ *occurs on* $y_R]$, and is upper bounded to $\frac{2 \cdot (470q^3)^9}{2^n}$;

Then the probability that **BadHit** happens in no more than $21 \cdot 10q^3$ φ tape accessing actions is upper bounded to $\frac{(21 \cdot 10q^3) \cdot (470q^3)^9}{2^n}$, while that in no more than $10q^3$ η tape accessing is upper bounded to $\frac{(10q^3) \cdot 2 \cdot (470q^3)^9}{2^n}$. In total it is

$$\begin{aligned} Pr[\mathbf{BadHit}] &\leq \frac{21 \cdot 10q^3 \cdot (470q^3)^9}{2^n} + \frac{10q^3 \cdot 2 \cdot (470q^3)^9}{2^n} \\ &\leq \frac{2^{88} \cdot q^{30}}{2^n} \end{aligned}$$

as claimed. □

[5] The values added by $\widetilde{E}(\eta).E^-$ are the same as $\widetilde{E}(\eta).E^+$.

The executions $\mathbf{D}^{\Sigma_1^{'}(\widetilde{E}(\eta),\widetilde{S}(\varphi))}$ during which **BadHit** does not happen are called *good executions*. The next section shows that during good executions, $\widetilde{S}(\varphi)$ never overwrites entries.

Good Executions: No Overwriting We first define the *3-state partial chains* in $\Sigma_1^{'}(\widetilde{E}(\eta),\widetilde{S}(\varphi))$, then show a series of lemmas which finally establishes the conclusion of non-overwriting.

Necessary Notions and Functions For KAF_{21}^{*} the partial chain is defined as a 4-tuple $(x_i, x_{i+1}, x_{i+2}, i)$ where $x_i, x_{i+1}, x_{i+2} \in \{0,1\}^n$ and $i \in \{0,\ldots,20\}$. The associated key is $k = x_i \oplus G_{i+1}(x_{i+1}) \oplus x_{i+2}$ if $x_{i+1} \in G_{i+1}$. Further denote $C[1] = x_i$, $C[2] = x_{i+1}$, $C[3] = x_{i+2}$, $C[4] = i$. Given hash tables $G_1,\ldots,G_{21}$ and $\widetilde{E}(\eta).E$ at some point in the execution $D^{\Sigma_1^{'}(\widetilde{E}(\eta),\widetilde{S}(\varphi))}$, we define helper functions *next* and *prev* which take a partial chain C as input and return the partial chain obtained by moving respectively one step forward or backward in KAF_{21}^{*}, or empty value $\perp$ when the moving is blocked by some misdefined value in tables G_i or $\widetilde{E}(\eta).E$. We also introduce helper functions val_l^{+} and val_l^{-} to help probe in the computation path; and function k which returns the associated key value if the value can be calculated, or $\perp$ otherwise.

```
function next(x_i, x_{i+1}, x_{i+2}, i)
    if x_{i+1} ∉ G_{i+1} then
        return ⊥
    end if
    k := x_i ⊕ G_{i+1}(x_{i+1}) ⊕ x_{i+2}
    if i < 20 then
        if x_{i+2} ∉ G_{i+2} then
            return ⊥
        end if
        x_{i+3} := x_{i+1} ⊕ G_{i+2}(x_{i+2}) ⊕ k
        return (x_{i+1}, x_{i+2}, x_{i+3}, i + 1)
    else
        if (−, k, (x_{22}, x_{21})) ∉ E then
            return ⊥
        end if
        (x_1, x_0) := E(−, k, (x_{22}, x_{21}))
        if x_1 ∉ G_1 then
            return ⊥
        else
            x_2 := x_0 ⊕ G_1(x_1) ⊕ k
            return (x_0, x_1, x_2, 0)
        end if
    end if
end function
```

```
function prev(x_i, x_{i+1}, x_{i+2}, i)
    if x_{i+1} ∉ G_{i+1} then
```

```
        return ⊥
    end if
    k := x_i ⊕ G_{i+1}(x_{i+1}) ⊕ x_{i+2}
    if i > 0 then
        if x_i ∉ G_i then
            return ⊥
        end if
        x_{i-1} := x_{i+1} ⊕ G_i(x_i) ⊕ k
        return (x_{i-1}, x_i, x_{i+1}, i - 1)
    else
        if (+, k, (x_1, x_0)) ∉ E then
            return ⊥
        end if
        (x_{22}, x_{21}) := E(+, k, (x_1, x_0))
        if x_{21} ∉ G_{21} then
            return ⊥
        else
            x_{20} := x_{22} ⊕ G_{21}(x_{21}) ⊕ k
            return (x_{20}, x_{21}, x_{22}, 20)
        end if
    end if
end function
function val_l^+(C)
    if l ≥ 2 then
        while (C ≠ ⊥) ∧ (C[4] ∉ {l - 2, l - 1, l}) do
            C := next(C)
        end while
        if C = ⊥ then
            return ⊥
        else
            return C[(l - C[4] + 1)]
        end if
    else
        // l = 0 or 1
        while (C ≠ ⊥) ∧ (C[4] ≠ 20) do
            C := next(C)
        end while
        if C = ⊥ then
            return ⊥
        else if (−, k(C), (C[3], C[2])) ∉ E then
            return ⊥
        else
            (v[1], v[0]) := E(−, k(C), (C[3], C[2]))
            return v[l]
        end if
```

```
    end if
end function
```

```
function val_l^-(C)
    if l ≤ 20 then
        while (C ≠ ⊥) ∧ (C[4] ∉ {l − 2, l − 1, l}) do
            C := prev(C)
        end while
        if C = ⊥ then
            return ⊥
        else
            return C[(l − C[4] + 1)]
        end if
    else
        // l = 21 or 22
        while (C ≠ ⊥) ∧ (C[4] ≠ 0) do
            C := prev(C)
        end while
        if C = ⊥ then
            return ⊥
        else if (+, k(C), (C[2], C[1])) ∉ E then
            return ⊥
        else
            (v[22], v[21]) := E(+, k(C), (C[2], C[1]))
            return v[l]
        end if
    end if
end function
```

```
function k(x_j, x_{j+1}, x_{j+2}, j)
    if x_{j+1} ∉ G_{j+1} then
        return ⊥
    else
        return x_j ⊕ G_{j+1}(x_{j+1}) ⊕ x_{j+2}
    end if
end function
```

Notations $prev^j$ and $next^j$ are used to denote the j-th functional power of *prev* and *next* respectively. To make the functional powers well-defined, we define $prev(\perp) = \perp$ and $next(\perp) = \perp$[6]. Then we introduce the notions of *equivalent* and *table-defined* partial chains:

Definition 3. *Two partial chains C and D are* equivalent *if $C = D$, or for some $1 \leq j \leq 20$, $C = next^j(D)$ or $C = prev^j(D)$. Denote it by $C \equiv D$.*

[6] This makes the definition well-defined. However this actually has no additional influence on the subsequent proof.

Definition 4. *For the hash tables $G_1, \ldots, G_{21}$, and $\widetilde{E}(\eta).E$ at some point in the execution of $D^{\Sigma_1^{'}(\widetilde{E}(\eta),\widetilde{S}(\varphi))}$, a partial chain $C = (x_i, x_{i+1}, x_{i+2}, i)$ is said to be table-defined if $next(C) \neq \perp$ and $prev(C) \neq \perp$.*

Note that when $i \in \{1, \ldots, 21\}$, $C = (x_i, x_{i+1}, x_{i+2}, i)$ being table-defined implies $x_i \in G_i$, $x_{i+1} \in G_{i+1}$, and $x_{i+2} \in G_{i+2}$, i.e. all the three values involved in C have been in the history $\mathcal{H}$ of the execution. When $i = 0$ ($= 20$, resp.), it means that (x_1, x_0) ((x_{22}, x_{21}), resp.) has been in table E, which also implies that all the three values involved in C have been in $\mathcal{H}$.

The definition of *safe Adapt* call in the 3-state partial chain setting is more involved than that in the 2-state setting, e.g. that in [17]. The idea is that during the *Adapt* procedure, *at least one of the two* buffer rounds $l-2$ and $l-1$ ($l+2$ and $l+3$, resp.) can be freely set to fresh random values. For simplicity, we will call such a condition *safe Adapt call condition* in the following sections.

Definition 5. *A call to $Adapt(x_{l-4}, x_{l-3}, x_{l-2}, x_{l+3}, x_{l+4}, x_{l+5}, l)$ is called* safe *if the following holds before the call:* [7]

$$
\begin{aligned}
&(((x_{l-2} \notin G_{l-2}) \vee (x_{l-2} \in G_{l-2} \wedge x_{l-3} \oplus G_{l-2}(x_{l-2}) \oplus k(x_{l-4}, x_{l-3}, x_{l-2}, l-4) \\
&\quad \notin G_{l-1})) \\
&\wedge((x_{l+3} \notin G_{l+3}) \vee (x_{l+3} \in G_{l+3} \wedge x_{l+4} \oplus G_{l+3}(x_{l+3}) \oplus k(x_{l+3}, x_{l+4}, x_{l+5}, l+3) \\
&\quad \notin G_{l+2})))
\end{aligned}
$$

Definition 6. *A call to $ForceVal(x, y, l)$ is called* non-overwriting *if $x \notin G_l$ before the call.*

Two special notions *key-defined* and *key-undefined* are introduced for the 3-state partial chain setting.

Definition 7. *A partial chain $C = (x_j, x_{j+1}, x_{j+2}, j)$ is called* key-defined *if $x_{j+1} \in G_{j+1}$; otherwise is called* key-undefined.

Note that:

- For a partial chain C, $k(C) \neq \perp$ if and only if C is key-defined.
- Each chain dequeued from *ChainQueue* is table-defined, and each table-defined chain is key-defined.

Further note that the notion key-undefined affects very little. More clearly, the lemmas in the next pragraph almost all focus on key-defined (even table-defined) chains; key-undefined chains only occur in the proofs of Lemma 8 and 15.

[7] Note that by construction, when *Adapt* is called, $k(x_{l-4}, x_{l-3}, x_{l-2}, l-4) \neq \perp$ and $k(x_{l+3}, x_{l+4}, x_{l+5}, l+3) \neq \perp$ must hold.

Good Executions: Properties In this section we show some properties that are helpful for the proof of our main goal, i.e. $\widetilde{S}(\varphi)$ never overwrites entries. The following lemma presents some basic properties of the random tape accessing and the subsequent entry setting actions in good executions:

Lemma 8. *The following hold in a good execution* $\mathbf{D}^{\Sigma_1'(\widetilde{E}(\eta),\widetilde{S}(\varphi))}$*:*

(i) For any key-defined partial chain C, if $next(C) = \perp$ before a random tape accessing and subsequent entry setting action on either $\widetilde{E}(\eta).E$ or $\{G_i\}$, then if C is table-defined after the action, it holds that $next^2(C) = \perp$[8]*.*

(ii) For any key-defined partial chain C, if $prev(C) = \perp$ before a random tape accessing and subsequent entry setting action on either $\widetilde{E}(\eta).E$ or $\{G_i\}$, then if C is table-defined after the action, it holds that $prev^2(C) = \perp$.

(iii) For any key-defined partial chain C and each $\delta \in \{+,-\}$, a random tape accessing and entry setting action $G_j(x_j) := \varphi_j(x_j)$ can only change at most one of the values $val_i^\delta(C)$; and if such change happens, then:
- *the value is changed from $\perp$ to some non-empty values.*
- *if $\delta = +$, $i = j+1$; if $\delta = -$, $i = j-1$.*
- *$val_j^\delta(C) = x_j$ before the assignment.*
- *after the action, if C is table-defined, then $val_i^\delta(C) \notin G_i$.*

Proof. We prove the propositions one-by-one.

(i) Suppose $C = (x_l, x_{l+1}, x_{l+2}, l)$, and assume otherwise, i.e. $next(next(C)) \neq \perp$ after the action. Depending on l, we distinguish two cases:
- $l < 20$: in this case, before the action, from $next(C) = \perp$ and C was key-defined we know $x_{l+2} \notin G_{l+2}$. Since C turns to be table-defined after the action, the action must be $G_{l+2}(x_{l+2}) := \varphi_{l+2}(x_{l+2})$. Then if $next(next(C)) \neq \perp$ holds after the action, either of the following two must holds:
  (a) when $l \leq 18$, we have
  $$\begin{aligned} x_{l+3} &= x_{l+1} \oplus \varphi_{l+2}(x_{l+2}) \oplus k(C) \\ &= x_{l+1} \oplus \varphi_{l+2}(x_{l+2}) \oplus x_l \oplus G_{l+1}(x_{l+1}) \oplus x_{l+2} \in G_{l+3}, \end{aligned}$$
  which means the value read from φ equals xor of 5 values in $\mathcal{H}$: $\varphi_{l+2}(x_{l+2}) = x_{l+1} \oplus x_l \oplus G_{l+1}(x_{l+1}) \oplus x_{l+2} \oplus x_{l+3}$.
  (b) when $l = 18$, we have $(-, k(C), (x_{22}, x_{21})) \in E$ (and $x_{22} \in \mathcal{H}$) for $x_{22} = x_{20} \oplus G_{21}(x_{21}) \oplus k(C)$, which (also) means the value read from φ equals xor of 5 values in $\mathcal{H}$: $\varphi_{21}(x_{21}) = x_{20} \oplus x_{19} \oplus G_{20}(x_{20}) \oplus x_{21} \oplus x_{22}$.

  Both of the above two contradict the assumption that **BadHit** does not happen.

[8] In fact, the condition *key-defined* can be eliminated to reach a generalization; however such a generalization is useless.

– $l = 20$ ($C = (x_{20}, x_{21}, x_{22}, 20)$): in this case, the assumption that before the action $next(C) = \perp$ while after the action C turns to be table-defined and $next(next(C)) \neq \perp$ means, before the action, exactly one of the following two holds:
  (a) $(-, k(C), (x_{22}, x_{21})) \notin E$
  (b) $(-, k(C), (x_{22}, x_{21})) \in E \wedge x_1 \notin G_1$ for $(x_1, x_0) = E(-, k(C), (x_{22}, x_{21}))$

  while after the action, all the following three hold:
  - $(-, k(C), (x_{22}, x_{21})) \in E$ (by C being table-defined)
  - for $(x_1, x_0) = E(-, k(C), (x_{22}, x_{21}))$, $x_1 \in G_1$ (by C being table-defined and $next(next(C)) \neq \perp$)
  - $x_2 \in G_2$ for $x_2 = x_0 \oplus G_1(x_1) \oplus k(C)$ (by $next(next(C)) \neq \perp$)

  We exclude the possibility for each case:
  (a) the first case: $(-, k(C), (x_{22}, x_{21})) \notin E$ before the action, and the action is $E(-, k(C), (x_{22}, x_{21})) := \eta(-, k(C), (x_{22}, x_{21}))$. In such case, since $x_1 \in G_1$ after the action, the value m read from η satisfies $m_L = x_1$ which has been in $\mathcal{H}$, a contradiction.
  (b) the second case: $x_1 \notin G_1$ before the action, and the action is $G_1(x_1) := \varphi_1(x_1)$. In such case, after the action we have $x_2 = x_0 \oplus \varphi_1(x_1) \oplus k(C) \in G_2$, hence $\varphi_1(x_1) = x_0 \oplus (x_{20} \oplus G_{21}(x_{21}) \oplus x_{22}) \oplus x_2$, a contradiction.

(ii) The proof is similar to (i) by symmetry.

(iii) By construction, the action $G_j(x_j) := \varphi_j(x_j)$ never overwrites entries in the tables. Hence $val_i^+(C)$ or $val_i^-(C)$ can only change from $\perp$ to non-empty values. Let $y_j = \varphi_j(x_j)$, and *wlog* consider the case when $val_i^+(C)$ changes. According to the implementation of function val_i^+, before the action $G_j(x_j) := y_j$, $val_i^+(C) = \perp$ might be due to either of the following two:
  (a) for some $1 \leq l \leq 21$, $val_l^+(C) \neq \perp \wedge val_l^+(C) \notin G_l$, and calculating $val_i^+(C)$ requires $val_l^+(C) \in G_l$;
  (b) $val_{22}^+(C) \neq \perp \wedge val_{21}^+(C) \neq \perp \wedge (-, k(C), (val_{22}^+(C), val_{21}^+(C))) \notin E$;

  In the second case, $G_j(x_j) := y_j$ will not affect $val_i^+(C)$ since after the action, $(-, k(C), (val_{22}^+(C), val_{21}^+(C))) \notin E$ still holds. In the first case we argue $j = l = i - 1 \wedge val_j^+(C) = x_j$ to hold:
  (a) if $j \neq l \vee (j = l \wedge val_j^+(C) \neq x_j)$, then $G_j(x_j) := y_j$ will not affect $val_i^+(C)$ since after the action, $val_l^+(C) \notin G_l$ still holds;
  (b) if $j = l < i - 2$, then $val_{j+2}^+(C) = x_j \oplus G_{j+1}(val_{j+1}^+(C)) \oplus (val_{j-1}^+(C) \oplus y_j \oplus val_{j+1}^+(C))$ must be either $\perp$ (when $val_{j+1}^+(C) \notin G_{j+1}$) or non-empty value which has not been in G_{j+2} (to avoid **BadHit**). Since $j+2 < i$, this implies $val_i^+(C) = \perp$ after the action – and contradicts the assumption;
  (c) if $j = l = i - 2$, for $val_i^+(C) = val_{i-2}^+(C) \oplus G_{i-1}(val_{i-1}^+(C)) \oplus k(C) \neq \perp$ to hold after the action, $val_{i-1}^+(C) \in G_{i-1}$ must hold before the action. In such case, if $C = (val_{i-3}^+(C), val_{i-2}^+(C), val_{i-1}^+(C), i - 3)$, then C is key-undefined before the action, contradicting the assumption; let $C^* = (val_{i-4}^+(C), val_{i-3}^+(C), val_{i-2}^+(C), i - 4)$, if $C = prev^s(C^*)$ for some $s \geq 0$, then $next(C^*) = \perp$ before the action while after the

action, either $next(C^*) = \perp$ (when $val^+_{i-3}(C) \notin G_{i-3}$) which contradicts the assumption that $val^+_i(C)$ changes, or $next^2(C^*) \neq \perp$ (when $val^+_{i-3}(C) \in G_{i-3}/C^*$ is key-defined) which contradicts proposition (i).

We then show the uniqueness. Let $C^{'} = (val^+_{i-3}(C), val^+_{i-2}(C), val^+_{i-1}(C), i-3)$. By discussions above we know $C^{'}$ must have been key-defined before the action. *Wlog*, for some $i' \geq i+1$, suppose $val^+_{i'}(C)$ also changes from $\perp$ to non-empty values. Then $next(C^{'}) = \perp$ before $G_j(x_j) := \varphi_j(x_j)$ while $next^2(C^{'}) \neq \perp$ after $G_j(x_j) := \varphi_j(x_j)$, contradicting proposition (i).

Finally, if $val^+_i(C) \in G_i$ after the action, then $next(C^{'}) = \perp$ before the action while $next^2(C^{'}) \neq \perp$ after the action, contradicting proposition (i).

Hence we establish the claim for $val^+_i(C)$. The reasoning for $val^-_i(C)$ is similar by symmetry. □

The next lemma presents basic properties of the equivalence relation $\equiv$.

Lemma 9. *During a good execution $\mathbf{D}^{\Sigma_1^{'}(\widetilde{E}(\eta),\widetilde{S}(\varphi))}$, at any point such that all the previous calls to $ForceVal$ were non-overwriting, the following hold:*

(i) For any two partial chains C and D, $next(C) = D \Leftrightarrow prev(D) = C$.
(ii) The relation $\equiv$ between partial chains is an equivalence relation.
(iii) If two table-defined partial chains C and D are equivalent at this point, then there exists a sequence of table-defined chains $C_1, \ldots, C_r (r \geq 1)$ s.t.
- *$C = C_1$ and $D = C_r$, or $C = C_r$ and $D = C_1$.*
- *$C_i = next(C_{i-1})$ and $C_{i-1} = prev(C_i)$.*

Proof. (i) By construction, only $ForceVal$ can overwrite entries. Since all are assumed to be non-overwriting, both evaluating KAF^* one step forward or backward and evaluating $E.Enc$ or $E.Dec$ are bijective and (i) holds.
(ii) Due to (i), $\equiv$ is symmetric, and by definition it is reflexive and transitive.
(iii) By definition we know $D = next^j(C)$ or $D = prev^j(C)$ for some j. In the former case the chain sequence is $C_1 = C$, $C_2 = next(C)$, ..., $C_i = next^{i-1}(C)$, ..., $C_r = D$ where $r = j+1$; in the latter case it is similar by symmetry. Obviously, all the chains are table-defined. □

Then we show the invariance of the equivalence relation for chains before and after the tape accessing and entry setting action.

Lemma 10. *Consider a good execution $\mathbf{D}^{\Sigma_1^{'}(\widetilde{E}(\eta),\widetilde{S}(\varphi))}$. Let C and D be two table-defined chains at some point in $\mathbf{D}^{\Sigma_1^{'}(\widetilde{E}(\eta),\widetilde{S}(\varphi))}$ such that all the previous calls to $ForceVal$ were non-overwriting. Assume a tape accessing and entry setting action happens after this point, then the equivalence of C and D is invariant before and after this action.*

Proof. If $C \equiv D$ before the action, then the chain sequence linked C and D is invariant before and after the action since no entry is overwritten, and $C \equiv D$ after the action. On the other hand if sequence $C_1, \ldots, C_r$ links C and D after

the action while $next(C_j) = prev(C_{j+1}) = \perp$ before the action, then D being table-defined before the action implies $j + 1 < r$. In this case, $next(C_j) = \perp$ before the action while $next(C_j) \neq \perp \wedge next^2(C_j) \neq \perp$ after the action, which contradicts Lemma 8 (i). Hence $C \equiv D$ before the action. □

The following lemma shows that two inequivalent chains cannot collide at two consecutive rounds when they are extended by the random tape accessing and entry setting actions.

Lemma 11. *Fix a point in a good execution* $\mathbf{D}^{\Sigma_1'(\widetilde{E}(\eta),\widetilde{S}(\varphi))}$ *and suppose all calls to* $ForceVal$ *to be non-overwriting up to this point. Assume a random tape accessing and entry setting action* $G_i(x_i) := \varphi_i(x_i)$ *happens right after this point, then for any two key-defined partial chains* C *and* D*, any* $l \in \{1, \ldots, 21\}$*, and any* $\delta \in \{+, -\}$*, the following four cannot be simultaneously fulfilled:*

(i) before the action, C *is not equivalent to* D*;*
(ii) before the action, $val_l^\delta(C) = \perp$ *or* $val_l^\delta(D) = \perp$*;*
(iii) after the action, C *and* D *are table-defined;*
(iv) after the action, $(val_l^\delta(C) = val_l^\delta(D) \neq \perp) \wedge (val_{l-1}^\delta(C) \oplus k(C) = val_{l-1}^\delta(D) \oplus k(D))$ *when* $\delta = +$*, or* $(val_l^\delta(C) = val_l^\delta(D) \neq \perp) \wedge (val_{l+1}^\delta(C) \oplus k(C) = val_{l+1}^\delta(D) \oplus k(D))$ *when* $\delta = -$*;*

Proof. Towards a contradiction assume all the four statements to hold after an action $G_i(x_i) := \varphi_i(x_i)$ for two partial chains C and D, some $l \in \{1, \ldots, 21\}$, and $\delta = +$. Let $y_i = \varphi_i(x_i)$, and *wlog* assume $val_l^+(C) = \perp$ before the action. Then since the two chains are key-defined before the action and $val_l^+(C)$ is changed from $\perp$ to non-empty values by the action, by Lemma 8 (iii), $i = l - 1$, and $val_i^+(C) = x_i$ must hold before the action. We distinguish two cases:

- $val_{i+1}^+(D) = \perp$ before the action. Then $val_i^+(D) = x_i$ must hold before the action. Let $(x_{i-2}, x_{i-1}, x_i, i-2) = next^{j_1}(C)$ and $(x'_{i-2}, x'_{i-1}, x_i, i-2) = next^{j_2}(D)$ for sufficiently large j_1 and j_2. If $val_{i+1}^+(C) = val_{i+1}^+(D) = x_{i+1} \neq \perp$ holds after the action, then after the action we have $x_{i-1} \oplus G_i(x_i) \oplus k(C) = x'_{i-1} \oplus G_i(x_i) \oplus k(D)$, which implies $x_{i-1} \oplus k(C) = x'_{i-1} \oplus k(D)$ to hold before the action. Note that $x_{i-1} = x'_{i-1}$ cannot hold, since otherwise $(x_{i-1}, x_i, x_{i+1}, i-1) = (x'_{i-1}, x_i, x_{i+1}, i-1)$ and $C \equiv D$ which contradicts the assumption that C is not equivalent to D before the action. Therefore $k(C) = x_{i-1} \oplus G_i(x_i) \oplus x_{i+1} \neq x'_{i-1} \oplus G_i(x_i) \oplus x_{i+1} = k(D)$, and
$$val_{l-1}^+(C) \oplus k(C) = x_i \oplus k(C) \neq x_i \oplus k(D) = val_{l-1}^+(D) \oplus k(D).$$
This implies that the four statements cannot simultaneously hold.
- $val_{i+1}^+(D) \neq \perp$ before the action. Then $val_i^+(C) \neq val_i^+(D)$ must hold, otherwise $val_{i+1}^+(C) \neq \perp$. Let $(x_{i-2}, x_{i-1}, x_i, i-2) = next^{j_1}(C)$ and $(x'_{i-2}, x'_{i-1}, x_i, i-2) = next^{j_2}(D)$ for sufficiently large j_1 and j_2. Since D is table-defined after the entry setting action on $G_i(x_i)$, D must have been table-defined before the action. Further since $val_l^+(C) = val_l^+(D) \neq \perp$ after the action, we have $x_{i-1} \oplus y_i \oplus k(C) = x'_{i-1} \oplus G_i(x'_i) \oplus k(D)$, i.e.
$$\varphi_i(x_i) = y_i = x_{i-1} \oplus x_{i-2} \oplus G_{i-1}(x_{i-1}) \oplus x_i \oplus x'_{i-1} \oplus G_i(x'_i) \oplus x'_{i-2} \oplus G_{i-1}(x'_{i-1}) \oplus x_i,$$

BadHit happens.

The reasoning for $\delta = -$ is similar by symmetry. $\square$

The following lemma claims that if all the previous calls to $ForveVal$ were non-overwriting, then the calls to $ForceVal$ triggered by safe calls to *Adapt* do not affect the values in previously defined chains, nor the equivalence relation.

Lemma 12. *Consider a safe call Adapt*$(x_{l-4}, x_{l-3}, x_{l-2}, x_{l+3}, x_{l+4}, x_{l+5}, l)$ *in a good execution* $\mathbf{D}^{\Sigma_1'(\widetilde{E}(\eta),\widetilde{S}(\varphi))}$*, and suppose all the previous calls to Adapt to be safe, then:*

(i) Right before the subsequent call to $F^{inner}(l-1, x_{l-1})$*,* $x_{l-1} \notin G_{l-1}$*; right before the subsequent call to* $F^{inner}(l+2, x_{l+2})$*,* $x_{l+2} \notin G_{l+2}$*;*
(ii) The subsequent calls to $ForceVal$ *are non-overwriting.*
(iii) If a chain C *is table-defined before this call to Adapt and is not equivalent to the chain which is being completed, then for any* $i \in \{1, \ldots, 21\}$*,* $val_i^+(C)$ *and* $val_i^-(C)$ *are invariant before and after both calls to* $ForceVal$*.*
(iv) If two chains C *and* D *are table-defined before this call to Adapt, then the equivalence of* C *and* D *is invariant before and after the subsequent calls to* $ForceVal$*.*

Proof. Denote the chain being completed by $C_{complete}$. Then, for proposition (i), consider x_{l-1}. Since the call to *Adapt* is safe, before the *Adapt* either $x_{l-2} \notin G_{l-2}$ or $x_{l-2} \in G_{l-2} \wedge x_{l-1} \notin G_{l-1}$ holds. If the latter holds, then clearly proposition (i) holds. If the former holds, then action $G_{l-2}(x_{l-2}) := \varphi_{l-2}(x_{l-2})$ must happen during the call to $F^{inner}(l-2, x_{l-2})$. Before this action, $x_{l-4} \in G_{l-4}$, $x_{l-3} \in G_{l-3}$, and $next(x_{l-4}, x_{l-3}, x_{l-2}, l-4) = \perp$, hence by Lemma 8 (i), after this action we have $next^2(x_{l-4}, x_{l-3}, x_{l-2}, l-4) = \perp$ and $x_{l-1} \notin G_{l-1}$. Utilizing Lemma 8 (ii), and by symmetry we achieve the proof of $x_{l+2} \notin G_{l+2}$.

Gathering proposition (i) and Lemma 8 (i), (ii) yields $x_l \notin G_l$ and $x_{l+1} \notin G_{l+1}$ before the call to $ForceVal$. Therefore proposition (ii) holds.

For proposition (iii), consider a chain $C = (x_j, x_{j+1}, x_{j+2}, j)$ which is table-defined before the call to *Adapt*. Let $B = (x_{l-4}, x_{l-3}, x_{l-2}, l-4)$ and $D = (x_{l+3}, x_{l+4}, x_{l+5}, l+3)$. Then $B \equiv D \equiv C_{complete}$ while C cannot be equivalent to them by assumption. Suppose $val_i^+(C)$ is changed by the subsequent calls to $ForceVal$. Then $val_l^+(C) = x_l$ or $val_{l+1}^+(C) = x_{l+1}$ must hold before the calls to $ForceVal$, for the value of $val_i^+(C)$ to change.

We first assume $val_l^+(C) = x_l$ just before the two calls to $ForceVal$. For each of the following cases, we exclude the possibility:

(i) Before the call to *Adapt*, $val_l^+(C) \neq \perp$. Then $val_l^+(C)$ can be written as xor of five values extracted from the history: $val_l^+(C) = val_{l-2}^+(C) \oplus G_{l-1}(val_{l-1}^+(C)) \oplus x_j \oplus G_{j+1}(x_{j+1}) \oplus x_{j+2}$. By proposition (i), $x_{l-1} \notin G_{l-1}$ before $y_{l-1} := F^{inner}(l-1, x_{l-1})$ is executed, therefore the value x_l calculated by $x_l := x_{l-2} \oplus \varphi_{l-1}(x_{l-1}) \oplus k(B)$ cannot equal $val_l^+(C)$ unless $\varphi_{l-1}(x_{l-1}) = (val_{l-2}^+(C) \oplus G_{l-1}(val_{l-1}^+(C)) \oplus x_j \oplus G_{j+1}(x_{j+1}) \oplus x_{j+2}) \oplus (x_{l-2} \oplus x_{l-4} \oplus G_{l-3}(x_{l-3}) \oplus x_{l-2})$ and **BadHit** happens.

(ii) Before the call to *Adapt*, $val_l^+(C) = \perp$. We further distinguish two cases depending on $val_{l-2}^+(C)$ before the call to *Adapt*:

(a) $val_{l-2}^+(C) \in G_{l-2}$ while $val_{l-1}^+(C) \notin G_{l-1}$: then $val_{l-1}^+(C) = x_{l-1}$ must hold when $y_{l-1} := F^{inner}(l-1, x_{l-1})$ is executed, otherwise when $ForceVal$ is called, $val_l^+(C) = \perp \neq x_l$. Then, before the call to *Adapt*:

- if $x_{l-2} \notin G_{l-2}$, then $val_{l-1}^+(C) = x_{l-1}$ cannot hold when $y_{l-1} := F^{inner}(l-1, x_{l-1})$ is executed unless $\varphi_{l-2}(x_{l-2}) = (val_{l-3}^+(C) \oplus G_{l-2}(val_{l-2}^+(C)) \oplus x_j \oplus G_{j+1}(x_{j+1}) \oplus x_{j+2}) \oplus (x_{l-3} \oplus x_{l-4} \oplus G_{l-3}(x_{l-3}) \oplus x_{l-2})$ and **BadHit** happens.
- if $x_{l-2} \in G_{l-2}$ while $x_{l-1} \notin G_{l-1}$, the call to *Adapt* must set $G_{l-1}(val_{l-1}^+(C))$ besides $G_{l-1}(x_{l-1})$ to make $val_l^+(C) = x_l \neq \perp$ before the call to $ForceVal$. This means: before the call to *Adapt*, $val_{l-1}^+(C) = x_{l-1}$; and: $val_l^+(C) = val_l^+(B)$ immediately holds after $G_{l-1}(x_{l-1})$ is set. These imply the following two to hold simultaneously: (a) $val_{l-3}^+(C) \oplus G_{l-2}(val_{l-2}^+(C)) \oplus (val_{l-2}^+(C) \oplus G_{l-3}(val_{l-3}^+(C)) \oplus val_{l-4}^+(C)) = x_{l-3} \oplus G_{l-2}(x_{l-2}) \oplus (x_{l-4} \oplus G_{l-3}(x_{l-3}) \oplus x_{l-2})$; (b) $x_{l-2} \oplus (x_{l-4} \oplus G_{l-3}(x_{l-3}) \oplus x_{l-2}) = val_{l-2}^+(C) \oplus (val_{l-2}^+(C) \oplus G_{l-3}(val_{l-3}^+(C)) \oplus val_{l-4}^+(C))$. Therefore all the following 6 values have been in $\{G_i\}$ before the call to *Adapt*: $val_{l-4}^+(C)$, $val_{l-3}^+(C)$, $val_{l-2}^+(C)$ (by C being table-defined before the call), x_{l-4}, x_{l-3}, and x_{l-2}. By construction we know all the entries in G_{l-4}, G_{l-3}, and G_{l-2} are defined to random values drew from the tapes (none of the 3 rounds is in the adaptation zone), consequently among them six, the last one added to $\{G_i\}$ implies **BadHit**, and it is impossible for this case to occur.

(b) $val_{l-2}^+(C) \notin G_{l-2}$ (which means $val_{l-1}^+(C) = \perp$): in such case the call to *Adapt* must set $G_{l-2}(val_{l-2}^+(C))$ and $G_{l-1}(val_{l-1}^+(C))$ besides $G_{l-2}(x_{l-2})$ and $G_{l-1}(x_{l-1})$ to lead to $val_l^+(C) \neq \perp$. Then $val_l^+(C) = val_l^+(B) = x_l$ is impossible since C is not equivalent to B.

We then assume $val_{l+1}^+(C) = x_{l+1}$ just before the second call to $ForceVal$. By the discussions above, we have: before the call to *Adapt*, $val_l^+(C) \in G_l$ must hold, otherwise $val_l^+(C) \notin G_l$ is kept till the second call to $ForceVal$, which implies $val_{l+1}^+(C) = \perp$, a contradiction. Then $val_{l+1}^+(C)$ can be written as xor of five values in the history: $val_{l+1}^+(C) = val_{l-1}^+(C) \oplus G_l(val_l^+(C)) \oplus x_j \oplus G_{j+1}(x_{j+1}) \oplus x_{j+2}$. By proposition (i) we know $val_{l+1}^+(C) = x_{l+1}$ cannot holds before the second call to $ForceVal$, otherwise the call $F^{inner}(l+2, x_{l+2})$ triggers **BadHit**, i.e. $\varphi_{l+2}(x_{l+2}) = val_{l-1}^+(C) \oplus G_l(val_l^+(C)) \oplus x_j \oplus G_{j+1}(x_{j+1}) \oplus x_{j+2} \oplus x_{l+3} \oplus x_{l+2} \oplus G_{l+3}(x_{l+3}) \oplus x_{l+4}$.

The reasoning for $val_i^-(C)$ is similar. These establish proposition (iii).

For proposition (iv), let C and D be two chains which are table-defined before the *Adapt*. If $C \equiv D \equiv C_{completed}$ before the call to $ForceVal$, then clearly $C \equiv D \equiv C_{completed}$ after the call since no entry is overwritten; and the proposition that if $C \equiv D \equiv C_{completed}$ after the call to $ForceVal$ then $C \equiv D \equiv C_{completed}$ before the call is also trivial. If C and D are not equivalent to $C_{completed}$, then by proposition (iii) the values $val_i^\delta(C)$ and $val_i^\delta(D)$ are invariant before and after

the calls to $ForceVal$, $C \equiv D$ before $ForceVal$ implies $C \equiv D$ after $ForceVal$ meanwhile $C \equiv D$ after $ForceVal$ only if $C \equiv D$ before $ForceVal$. □

Given that no entry is overwritten, a chain dequeued form the queue will not be completed if some chain equivalent to it has been completed.

Lemma 13. *Assume at a fixed point in a good execution* $\mathbf{D}^{\Sigma_1'(\widetilde{E}(\eta),\widetilde{S}(\varphi))}$*, a chain* C *is dequeued such that* $C \notin CompletedSet$ *and all calls to Adapt were safe up to the point* C *is dequeued. Then when* C *was enqueued, no chain equivalent to* C *has been enqueued.*

Proof. Towards a contradiction assume a chain $D \equiv C$ has been enqueued before C was enqueued. Since **BadHit** is assumed to be absent, and all the previous calls to $ForceVal$ are assumed to be safe, by Lemma 10 and Lemma 12 (iv), $D \equiv C$ till C is dequeued. Hence when C is dequeued, D must have been dequeued and completed, and the completion of D must have added C to $CompletedSet$. This contradicts the assumption $C \notin CompletedSet$ when C is dequeued. □

Lemma 14. *Consider a good execution* $\mathbf{D}^{\Sigma_1'(\widetilde{E}(\eta),\widetilde{S}(\varphi))}$*. Let* C *be a chain which is dequeued and to be adapted at position* l *s.t.* $C \notin CompletedSet$*. Then the subsequent call to Adapt is safe, if the following holds when* C *is dequeued:*

$$(((val^+_{l-2}(C) \notin G_{l-2}) \vee (val^+_{l-2}(C) \in G_{l-2} \wedge val^+_{l-1}(C) \notin G_{l-1}))$$
$$\wedge((val^-_{l+3}(C) \notin G_{l+3}) \vee (val^-_{l+3}(C) \in G_{l+3} \wedge val^-_{l+2}(C) \notin G_{l+2}))).$$

Proof. The aim is to show the *safe Adapt call condition* to hold right before the call $Adapt(x_{l-4}, x_{l-3}, x_{l-2}, x_{l+3}, x_{l+4}, x_{l+5}, l)$. *Wlog* we show this for "x_{l-2} side". By construction, $C = (x_i, x_{i+1}, x_{i+2}, i)$ must be key-defined since being enqueued. Then, when C is enqueued,

(i) if $val^+_{l-2}(C) = \perp$, then by Lemma 8 (iii), $val^+_{l-2}(C)$ can only change from $\perp$ to some non-empty values during the random tape accessing and entry setting action on G_{l-3} which occurs in the procedure $EvalForward(C, l-2)$, and by Lemma 8 (i), $val^+_{l-2}(C) \notin G_{l-2}$ immediately holds after this action;
(ii) if $val^+_{l-2}(C) \neq \perp \wedge val^+_{l-2}(C) \notin G_{l-2}$ (i.e. $val^+_{l-1}(C) = \perp$), then $x_{l-2} = val^+_{l-2}(C) \notin G_{l-2}$ keeps holding till *Adapt* is called;
(iii) if $val^+_{l-2}(C) \in G_{l-2} \wedge val^+_{l-1}(C) \notin G_{l-1}$, then $x_{l-1} = val^+_{l-1}(C) \notin G_{l-1}$ keeps holding till *Adapt* is called;

By discussions above, the safe *Adapt* call condition holds before *Adapt*. □

The following two lemmas show that the assumptions of Lemma 14 hold in a good execution. Lemma 15 shows them to hold before the chains are enqueued, while Lemma 16 shows them to hold till the chains are dequeued.

Lemma 15. *Consider a good execution* $\mathbf{D}^{\Sigma_1'(\widetilde{E}(\eta),\widetilde{S}(\varphi))}$*. Let* C *be a partial chain which is enqueued at some time and to be adapted at position* l*. Suppose that no chain equivalent to* C *was enqueued before* C *is enqueued. Then:*

(i) $val^+_{l-2}(C) = \perp$ *and* $val^-_{l+3}(C) = \perp$ *before the call to* $F^{inner}(i, x)$ *which led to* C *being enqueued.*

(ii) right after C *is enqueued,* $val^+_{l-2}(C) \notin G_{l-2} \wedge val^-_{l+3}(C) \notin G_{l+3}$.

Proof. First, consider the case $l = 6$. The two propositions will be argued simultaneously. For the following three cases:

(i) $C = (x_1, x_2, x_3, 1, 6)$ is enqueued by a call to $F^{inner}(3, x_3)$: clearly before this call, $val^+_4(C) = \perp$. Assume $val^-_9(C) \neq \perp$, then $val^-_{10}(C) \in G_{10}$, $val^-_{11}(C) \in G_{11}$, $val^-_{12}(C) \in G_{12}$, and $(val^-_{10}(C), val^-_{11}(C), val^-_{12}(C), 10)$ would be a chain which is equivalent to C and has been enqueued before C is enqueued. This contradicts the assumption.
After the action $G_3(x_3) := \varphi_3(x_3)$ triggered by $F^{inner}(3, x_3)$, by Lemma 8 (iii) we have $val^+_4(C) \notin G_4$. Moreover $val^-_9(C) = \perp \notin G_9$ keeps holding.

(ii) $C = (x_{10}, x_{11}, x_{12}, 10, 6)$ is enqueued by a call to $F^{inner}(10, x_{10})$: clearly $val^-_9(C) = \perp$ before it. Assume $val^+_4(C) \neq \perp$, then let $(x_0, x_1, x_2, x_3, x_{19}, x_{20}, x_{21}, x_{22}) = (val^+_0(C), val^+_1(C), val^+_2(C), val^+_3(C), val^-_{19}(C), val^-_{20}(C), val^-_{21}(C), val^-_{22}(C))$. All these 8 values must be non-empty values, since otherwise $val^+_4(C) = \perp$. Then at some point in the execution, all the 7 values $G_1(x_1)$, $G_2(x_2)$, $G_3(x_3)$, $G_{19}(x_{19})$, $G_{20}(x_{20})$, $G_{21}(x_{21})$, and $E(-, k, (x_{22}, x_{21}))$ have been added to corresponding tables. Among them, consider the last added one. It must have been $G_3(x_3) := \varphi_3(x_3)$ or $G_{19}(x_{19}) := \varphi_{19}(x_{19})$ because:
   (a) it cannot be $E(-, k, (x_{22}, x_{21})) := \eta(-, k, (x_{22}, x_{21})) = (x_1, x_0)$, otherwise **BadHit** occurs.
   (b) it cannot be $G_1(x_1) := \varphi_1(x_1)$ or $G_2(x_2) := \varphi_2(x_2)$ since otherwise $val^+_4(x_{19}, x_{20}, x_{21}, 19)$ changes (contradicting Lemma 8 (iii)).
   (c) it cannot be $G_{20}(x_{20}) := \varphi_{20}(x_{20})$ or $G_{21}(x_{21}) := \varphi_{21}(x_{21})$ since otherwise $val^-_{18}(x_1, x_2, x_3, 1)$ changes (contradicting Lemma 8 (iii)).
   Hence the last action will trigger the chain detection and completion process and add C to $CompletedSet$, which contradicts the assumption.
   In this case, after C is enqueued, $val^-_9(C) \notin G_9$ immediately holds by Lemma 8 (iii), while $val^+_4(C) = \perp \notin G_4$ keeps holding.

(iii) $C = (x_{10}, x_{11}, x_{12}, 10, 6)$ is enqueued by a call to $F^{inner}(11, x_{11})$: now before C is enqueued, C is *key-undefined*, and $val^-_9(C) = \perp$ and $val^+_{13}(C) = \perp$ hold. Furthermore, $val^-_9(C) \notin G_9$ and $val^+_{13}(C) \notin G_{13}$ immediately hold after C is enqueued, otherwise **BadHit** happens e.g. if $val^-_9(C) = x_9 \in G_9$ then $\varphi_{11}(x_{11}) = x_9 \oplus x_{11} \oplus G_{10}(x_{10}) \oplus x_{10} \oplus x_{12}$. $val^+_{13}(C) \notin G_{13}$ further implies $val^+_4(C) = \perp \notin G_4$.

For $l = 15$, it is similar by symmetry, except for excluding case (iii). □

Lemma 16. *In a good execution* $\mathbf{D}^{\Sigma'_1(\widetilde{E}(\eta), \widetilde{S}(\varphi))}$*, all calls to Adapt are safe.*

Proof. Suppose the lemma does not hold, and let C be the first chain for which it fails. Clearly $C \notin CompletedSet$ when C is dequeued, and since all calls to *Adapt* before C is dequeued were safe, by Lemma 13 we know when C was enqueued, no chain equivalent to C had been enqueued. Hence, Lemma 15 implies that

$val^+_{l-2}(C) \notin G_{l-2} \wedge val^+_{l+3}(C) \notin G_{l+3}$ immediately holds after C was enqueued. We show that when C is dequeued, $val^+_{l-1}(C) \notin G_{l-1} \wedge val^+_{l+2}(C) \notin G_{l+2}$; this implies the conclusion by Lemma 14. *Wlog* consider $val^+_{l-2}(C)$ and $val^+_{l-1}(C)$. If $val^+_{l-2}(C) = \perp$ after C was enqueued, we show $val^+_{l-2}(C) = x_{l-2} \notin G_{l-2}$ immediately holds after $val^+_{l-2}(C) \neq \perp$ holds. Consider the last table entry setting action before $val^+_{l-2}(C) \neq \perp$ holds. Since C was table-defined, $val^+_{l-2}(C)$ cannot be changed by previous calls to $ForceVal$ (Lemma 12 (iii)); hence it was changed by a tape accessing and entry setting action. Then we have $val^+_{l-2}(C) = x_{l-2} \notin G_{l-2}$ after this action (by Lemma 8 (iii)).

Now assume $val^+_{l-1}(C) \in G_{l-1}$ when C is dequeued. Then during the period between the point C was enqueued and the point C is dequeued, the following two actions must have been induced by the completion of some other chains D:

(i) $val^+_{l-2}(C) = x_{l-2}$ was added to G_{l-2};
(ii) after action (i), $val^+_{l-1}(C) = x_{l-1}$ was added to G_{l-1};

We show it to be impossible to show $val^+_{l-1}(C) \notin G_{l-1}$ to hold when C is dequeued. If the two happen, then for $val^+_{l-2}(C)$ or $val^+_{l-1}(C)$ to be affected by the completion of D, we must have $val^+_{l-2}(D) = val^+_{l-2}(C)$ or $val^+_{l-1}(D) = val^+_{l-1}(C)$. We then show that for a chain D which is completed in this period,

- during the completion of D, if $val^+_{l-2}(C) = val^+_{l-2}(D)$, then $val^+_{l-1}(C) \neq val^+_{l-1}(D)$ (and $val^+_{l-1}(C)$ cannot be added to G_{l-1}).
- during the completion of D, $val^+_{l-1}(C)$ can be added to G_{l-1} only if $val^+_{l-2}(C) = val^+_{l-2}(D)$.

Gathering the two claims yields that $val^+_{l-1}(C)$ cannot be added to G_{l-1} during this period and the subsequent call to *Adapt* will be safe.

For the first claim, assume otherwise, i.e. $val^+_{l-2}(D) = val^+_{l-2}(C)$, and right after $G_{l-2}(val^+_{l-2}(D))$ was defined, $val^+_{l-1}(D) = val^+_{l-1}(C)$ holds. This means before $G_{l-2}(val^+_{l-2}(D))$ was defined, the following two hold:

(i) $val^+_{l-2}(D) = val^+_{l-2}(C) \neq \perp$
(ii) $val^+_{l-3}(D) + k(D) = val^+_{l-3}(C) + k(C)$

Consider the last table entry setting action, we exclude each possibility:

(i) This cannot be a tape accessing and table entry setting action. To illustrate this, assume otherwise. After this action, we have $val^+_{l-2}(D) \neq \perp$ and $val^+_{l-2}(C) \neq \perp$; then by Lemma 15 (i), C and D must have been enqueued (hence table-defined) after this action. Now the following four hold simultaneously, which contradicts Lemma 11:
  - before the action, C is not equivalent to D;
  - before the action, $val^\delta_l(C) = \perp$ or $val^\delta_l(D) = \perp$ (if not, then $val^+_{l-2}(D) = val^+_{l-2}(C)$ cannot hold);
  - after the action, C and D are table-defined;

– after the action, $val^+_{l-2}(D) = val^+_{l-2}(C) \neq \perp$ and $val^+_{l-3}(D) + k(D) = val^+_{l-3}(C) + k(C)$;

(ii) This cannot be a previous call to $ForceVal$ since both C and D must be inequivalent to the chains completed before, and by Lemma 12 (iii), $val^+_i(D)$ and $val^+_i(C)$ are invariant before and after any previous call to $ForceVal$;

Hence the first claim holds.

For the second claim, assume otherwise, then we know that before the entry setting action on $G_{l-1}(val^+_{l-1}(C))$, the following two hold:

(i) $val^+_{l-2}(C) \in G_{l-2}$, $val^+_{l-2}(D) \in G_{l-2}$, and $val^+_{l-2}(C) \neq val^+_{l-2}(D)$
(ii) $val^+_{l-1}(C) = val^+_{l-1}(D) \notin G_{l-1}$

Since none of the previous calls to $ForceVal$ affects $val^+_i(C)$ or $val^+_i(D)$ (by Lemma 12 (iii)), the last action before the above two hold must be a tape accessing and entry setting action. Moreover, since $val^+_{l-2}(C) \notin G_{l-2}$ and C is table-defined (and $val^+_{l-2}(D) \notin G_{l-2}$ and D is table-defined) immediately held after C (D, resp.) was enqueued and $val^+_{l-2}(C) \notin G_{l-2}$ ($val^+_{l-2}(C) \notin G_{l-2}$, resp.) changing from $\perp$ to non-empty value, the action must have been happened on either $G_{l-2}(val^+_{l-2}(C))$ or $G_{l-2}(val^+_{l-2}(D))$ (by Lemma 8 (iii)). However neither is possible: *wlog* assume it to be $G_{l-2}(val^+_{l-2}(C)) := \varphi_{l-2}(val^+_{l-2}(C))$, then after this action, the following holds (by $val^+_{l-1}(C) = val^+_{l-1}(D) \notin G_{l-1}$):

$$val^+_{l-3}(C) \oplus \varphi_{l-2}(val^+_{l-2}(C)) \oplus k(C) = val^+_{l-3}(D) \oplus G_{l-2}(val^+_{l-2}(D)) \oplus k(D)$$

Suppose $C = (c_i, c_{i+1}, c_{i+2}, i)$ and $D = (d_j, d_{j+1}, d_{j+2}, j)$, then we have

$$\begin{aligned}\varphi_{l-2}(val^+_{l-2}(C)) = {} & val^+_{l-3}(C) \oplus c_i \oplus G_{i+1}(c_{i+1}) \oplus c_{i+2} \\ & \oplus val^+_{l-3}(D) \oplus G_{l-2}(val^+_{l-2}(D)) \oplus d_j \oplus G_{j+1}(d_{j+1}) \oplus d_{j+2}\end{aligned}$$

which implies an occurrence of **BadHit**. Therefore the claim that $val^+_{l-1}(C)$ can be added to G_{l-1} only if $val^+_{l-2}(C) = val^+_{l-2}(D)$ holds.

Having excluded all possibilities we show $val^+_{l-1}(C) \notin G_{l-1}$ to hold when C is dequeued. The reasoning for $val^+_{l+1}(C) \notin G_{l+1}$ is similar by symmetry. Hence the subsequent call to *Adapt* will be safe. □

Lemma 17. *In a good execution* $\mathbf{D}^{\Sigma'_1(\widetilde{E}(\eta),\widetilde{S}(\varphi))}$*, all calls to* $ForceVal$ *are non-overwriting.*

Proof. Gathering Lemma 16 and Lemma 12 (ii) yields this lemma. □

Randomness Mapping Argument: Defining the Map Having specified the good executions $\mathbf{D}^{\Sigma'_1(\widetilde{E}(\eta),\widetilde{S}(\varphi))}$, we are now ready to define the map itself. We introduce some necessary notions first.

Basic Notions For any distinguisher $\mathbf{D}$, we define a distinguisher $\overline{D}$ which runs $\mathbf{D}$ and then emulates a call to $EvalForward(x_R, x_L, x_R \oplus F(1, x_L) \oplus k, 0, 20)$ ($EvalBackward(y_L \oplus F(21, y_R) \oplus k, y_R, y_L, 20, 0)$, resp.) for all queries $\widetilde{E}.Enc((x_L, x_R), k)$ ($\widetilde{E}.Dec((y_L, y_R), k)$, resp.) made by $\mathbf{D}$ during the execution, and outputs the output of $\mathbf{D}$. Clearly when $\mathbf{D}$ makes no more than q queries, $\overline{D}$ makes no more than $22q$ queries, and has exactly the same advantage as $\mathbf{D}$ in distinguishing $\Sigma_1^{'}$ and Σ_2. We call $\overline{D}$ the distinguisher which completes all chains corresponding to $\mathbf{D}$. Then, with respect to a fixed $\mathbf{D}$ and the corresponding $\overline{D}$, we introduce the following notions. Some of them are similar to those in [2].

- a tuple of random tapes $(\eta, \varphi) = (\eta, (\varphi_1, \ldots, \varphi_{21}))$ for $\Sigma_1^{'}$ is called a $\Sigma_1^{'}$-*tuple*;
- a tuple of random tapes $\pi = (\pi_1, \ldots, \pi_{21})$ for Σ_2 is called Σ_2-*tuple*;
- $R_1^{'}$ (R_2, resp.) is the set of all $\Sigma_1^{'}$-*tuples* (Σ_2-*tuples*, resp.);
- a $\Sigma_1^{'}$-*tuple* is called *good* if the execution $\overline{D}^{\Sigma_1^{'}(\widetilde{E}(\eta), \mathbf{S}(\varphi))}$ is good;
- $R_1^{good} \subseteq R_1^{'}$ is the set of all good $\Sigma_1^{'}$-*tuples* with respect to $\overline{D}$;
- *partial* $\Sigma_1^{'}$-*tuple*: random tapes obtained by arbitrarily setting some entries $\varphi_i(x)$ or entry pairs $(\eta(+, k, x), \eta(-, k, \eta(+, k, x)))$ to $\perp$ in a $\Sigma_1^{'}$-*tuple* (η, φ), while keeping the property $\eta(\delta, k, z) = z^{'} \neq \perp$ iff. $\eta(\overline{\delta}, k, z^{'}) = z \neq \perp$;
- $R_1^{partial}$: the set of all partial $\Sigma_1^{'}$-tuples;
- *partial* Σ_2-*tuple*: obtained by arbitrarily setting some entries $\pi_i(x)$ to $\perp$ in a Σ_2-*tuple* π. $R_2^{partial}$ is the set of all partial Σ_2-tuples;
- For $\pi \in R_2^{partial}$, denote the number of pairs (i, x) s.t. $\pi_i(x) \neq \perp$ by $|\pi|$;
- *footprint* of a random $\Sigma_1^{'}$-tuple (η, φ): the partial tuple obtained by
  (i) for any $i \in \{1, \ldots, 21\}$ and any $x \in \{0, 1\}^n$, setting $\varphi_i(x)$ to $\perp$, if $\varphi_i(x)$ is not accessed during $\overline{D}^{\Sigma_1^{'}(\widetilde{E}(\eta), \mathbf{S}(\varphi))}$;
  (ii) for any $z \in \{0, 1\}^{2n}$ and any $k \in \{0, 1\}^n$, setting both $\eta(+, k, z)$ and $\eta(-, k, \eta(+, k, z))$ to $\perp$, if neither $\eta(+, k, z)$ nor $\eta(-, k, \eta(+, k, z))$ is accessed during $\overline{D}^{\Sigma_1^{'}(\widetilde{E}(\eta), \mathbf{S}(\varphi))}$;
- the set of $\Sigma_1^{'}$-footprints is denoted by R_1^{foot}, and the set of footprints of good tuples (η, φ) is denoted by R_1^{good-f};
- $FootPrint((\eta, \varphi), \overline{D})$ denotes the footprint of (η, φ) with respect to $\overline{D}$;

For $\pi = (\pi_1, \ldots, \pi_{21}) \in R_2$ and $u = (\pi_1', \ldots, \pi_{21}') \in R_2^{partial}$, denote by $\pi \cong u$ the fact that for any $i \in \{1, \ldots, 21\}$ and any $x \in \{0, 1\}^n$, if $\pi_i'(x) \neq \perp$, then $\pi_i(x) = \pi_i'(x)$. Briefly speaking, $\pi \cong u$ means that π agrees with u on all the non-empty entries.

Defining the Map The map is

$$\tau : R_1^{good-f} \to R_2^{partial}.$$

Let $\alpha := (\eta, \varphi) \in R_1^{good-f}$. We define $\tau(\alpha) = \pi = (\pi_1, \ldots, \pi_{21})$ according to the tables $(\widetilde{E}(\eta).E, G_1, \ldots, G_{21})$ standing at the end of the execution of $\overline{D}^{\Sigma_1^{'}(\widetilde{E}(\eta), \widetilde{S}(\varphi))}$: for all $i \in \{1, \ldots, 21\}$ and $x \in G_i$, $\pi_i(x) := G_i(x)$; for all $i \in \{1, \ldots, 21\}$ and $x \notin G_i$, $\pi_i(x) := \perp$. Since α is a footprint, $\overline{D}^{\Sigma_1^{'}(\widetilde{E}(\eta), \widetilde{S}(\varphi))}$ is well-defined, and τ is also well-defined. Denote the range of τ by $\tau(R_1^{good-f})$.

Completing the RRMA We utilize the notion of transcript again. However, in some of the proofs we are only interested in the query-answer pairs generated by $\overline{D}$; this is different from Sect. 4.3. To make a distinction, we define the sequence composed of such pairs as *D-transcript*, that is, $dt = (dqa_1, dqa_2, \ldots)$. Each dqa_i is a 3-tuple $dqa_i = (procedure, query, answer)$, where $procedure \in \{Enc, Dec, F\}$. We also denote the function which extracts the D-transcript by $DTranscript(\cdot,\cdot)$, define the length of a finite D-transcript as the number of tuples in it, and define the partial D-transcript dt_j as the first j tuples. Note that both transcript and D-transcript will be used in this section.

Then with respect to $\overline{D}$, we have the following lemmas.

Lemma 18. *Suppose that $\widetilde{E}(\eta).Enc(x,k)$, resp. $\widetilde{E}(\eta).Dec(y,k)$ is queried during a good execution $\overline{D}^{\Sigma_1^{'}(\eta,\varphi)}$. Then, at the end of $\overline{D}^{\Sigma_1^{'}(\eta,\varphi)}$, we have $\widetilde{E}(\eta).E(+,k,x) = (val_{22}^{+}(x_R, x_L, x', 0), val_{21}^{+}(x_R, x_L, x', 0))$, resp. $\widetilde{E}(\eta).E(-,k,y) = (val_1^{-}(y', y_R, y_L, 20), val_0^{-}(y', y_R, y_L, 20))$, where $x' = x_R \oplus G_1(x_L) \oplus k$ and $y' = y_L \oplus G_{21}(y_R) \oplus k$.*

Proof. $\widetilde{S}$ queries $\widetilde{E}(\eta)$ only when it is completing a chain, hence if the query $\widetilde{E}(\eta).Enc(k,x)$ is made by $\widetilde{S}$, then the equality holds right after the completion of the chain, and will keep holding till the end since no entry will be overwritten during a good execution. On the other hand, if the query is issued by $\overline{D}$, then since $\overline{D}$ completes all chains, it must emulates a call to $EvalForward(x_R, x_L, x', 0, 20)$ where $x' = x_R \oplus F(1, x_L) \oplus k$, and must query $F(10, val_{10}^{+}(x_R, x_L, x', 0))$, $F(11, val_{11}^{+}(x_R, x_L, x', 0))$ and $F(12, val_{12}^{+}(x_R, x_L, x', 0))$ at some point, among which the last one will trigger the chain completion. After the completion, the equality holds, and will also keep holding till the end. The case of $\widetilde{E}(\eta).Dec(k,y)$ is similar by symmetry. □

Lemma 19. *It holds $DTranscript(\overline{D}, \Sigma_1^{'}(\alpha)) = DTranscript(\overline{D}, \Sigma_2(\tau(\alpha)))$ and $\overline{D}^{\Sigma_1^{'}(\alpha)} = \overline{D}^{\Sigma_2(\tau(\alpha))}$, if $\alpha \in R_1^{good-f}$.*

Proof. Let $\alpha = (\eta, \varphi) \in R_1^{good-f}$ and let $\beta = \tau(\alpha) = (\pi_1, \ldots, \pi_{21}) \in R_2^{partial}$. By the definition of τ, $\pi_1, \ldots, \pi_{21}$ are copies of the tables $G_1, \ldots, G_{21}$ standing at the end of the execution $\overline{D}^{\Sigma_1^{'}(\alpha)}$. Since $\overline{D}$ is deterministic, there exists a deterministic function Q_A^* (use notation Q_A^* to make a distinction from Q_A used in Sect. 4.3) which takes the partial D-transcript as input and returns the next query of $\overline{D}$.

Let $dt^{'} = DTranscript(\overline{D}, \Sigma_1^{'}(\alpha)) = (dqa_1^{'}, dqa_2^{'}, \ldots)$ and $dt = DTranscript(\overline{D}, \Sigma_2(\tau(\alpha))) = (dqa_1, dqa_2, \ldots)$. By Lemma 2 we know $dt^{'}$ is finite; suppose its length to be $l^{'}$. We show $dt^{'} \neq dt$ to be impossible: if $dt^{'} \neq dt$, then there must exist $1 \leq j \leq l^{'}$ s.t. $dqa_i \neq dqa_i^{'}$ (dqa_i may be $\perp$, when the length of dt is less than $l^{'}$). However this is impossible: suppose j to be the smallest value such that $dqa_j^{'} \neq dqa_j$. Then $dt_{j-1}^{'} = dt_{j-1}$ and $Q_A^*(dt_{j-1}^{'}) = Q_A^*(dt_{j-1})$, and these means that the *procedure* fields and *query* fields of $dqa_j^{'}$ and dqa_j equal correspondingly. We now argue the *answer* fields of them to be equal to make a contradiction. We distinguish the following cases:

- If the procedure field is F and the query is (i, x), then by construction we know the answer field of $dqa_j^{'}$ equals the value of $G_i(x)$ after this query is answered. Since $\alpha \in R_1^{good-f}$, $G_i(x)$ will not be overwritten during the whole lifetime of $\overline{D}^{\Sigma_1^{'}(\alpha)}$, and the answer field of $dqa_j^{'}$ equals the value of $G_i(x)$ standing at the end of $\overline{D}^{\Sigma_1^{'}(\alpha)}$. By the definition of τ we have $G_i(x) = \pi_i(x)$, hence the answer fields of $dqa_j^{'}$ and dqa_j are equal, and $dqa_j^{'} = dqa_j$;
- If the procedure field is Enc and the query is $(x, k) = ((x_L, x_R), k)$, by Lemma 18 we have $\widetilde{E}.Enc(x) = (val_{22}^{+}(x_R, x_L, x', 0), val_{21}^{+}(x_R, x_L, x', 0))$ where $x' = x_R \oplus G_1(F_L) \oplus k$. All the values necessary for calculating $val_{22}^{+}(x_R, x_L, x', 0)$ and $val_{21}^{+}(x_R, x_L, x', 0))$ are kept in $\{G_i\}$ till the end of $\overline{D}^{\Sigma_1(\eta,\varphi)}$ by the assumption that $\alpha \in R_1^{good-f}$ and then transferred to β by τ, hence $KAF_{21}^{*}.Enc(x, k) = (val_{22}^{+}(x_R, x_L, x_R \oplus \pi_1(F_L) \oplus k, 0), val_{21}^{+}(x_R, x_L, x_R \oplus \pi_1(F_L) \oplus k, 0)) = \widetilde{E}.Enc(x, k)$, and $dqa_j^{'} = dqa_j$;
- The case when the procedure field is Dec is similar to Enc by symmetry;

Therefore $dqa_j^{'} = dqa_j$ for any $1 \leq j \leq l^{'}$, $dt_{l'}^{'} = dt_{l'}$, $Q_A^{*}(dt_{l'}^{'}) = Q_A^{*}(dt_{l'}) = \perp$, the length of dt is also $l^{'}$, and $dt^{'} = dt$. This further implies $\overline{D}^{\Sigma_1^{'}(\alpha)} = \overline{D}^{\Sigma_2(\tau(\alpha))}$. □

Lemma 19 also shows that for any $v \in \tau(R_1^{good-f})$, $\overline{D}^{\Sigma_2(v)}$ is well-defined, i.e. during $\overline{D}^{\Sigma_2(v)}$, $\mathbf{F}(v)$ will not access the empty entries in v.

Lemma 20. $\tau : R_1^{good-f} \rightarrow R_2^{partial}$ *is one-to-one.*

Proof. Towards a contradiction, assume there exists $\alpha, \alpha^{'} \in R_1^{good-f}$ s.t. $\alpha \neq \alpha^{'}$ and $\tau(\alpha) = \tau(\alpha^{'}) = (\pi_1, \ldots, \pi_{21})$. Let $\alpha = (\eta, \varphi)$, $\alpha^{'} = (\eta^{'}, \varphi^{'})$, $\{G_i\}$ be the tables standing at the end of $\overline{D}^{\Sigma_1^{'}(\alpha)}$, and $\{G_i^{'}\}$ be those standing at the end of $\overline{D}^{\Sigma_1^{'}(\alpha^{'})}$. By the definition of τ, $\tau(\alpha) = (\pi_1, \ldots, \pi_{21})$ are copies of the tables $\{G_i\}$ standing at the end of $\overline{D}^{\Sigma_1^{'}(\alpha)}$; hence $\{G_i\}$ and $\{G_i^{'}\}$ are exactly the same, by $\tau(\alpha^{'}) = \tau(\alpha)$. Denote this fact by $\{G_i\} \equiv \{G_i^{'}\}$.

We argue $Transcript(\overline{D}, \Sigma_1^{'}(\alpha)) = Transcript(\overline{D}, \Sigma_1^{'}(\alpha^{'}))$ to hold, which implies that the execution processes of $\overline{D}^{\Sigma_1^{'}(\alpha)}$ and $\overline{D}^{\Sigma_1^{'}(\alpha^{'})}$ are same, and, each time a tape accessing action happens in $\overline{D}^{\Sigma_1^{'}(\alpha)}$, a same tape accessing action must happens in $\overline{D}^{\Sigma_1^{'}(\alpha^{'})}$, and the two values read must be equal. This means that the zones of α and $\alpha^{'}$ accessed during the executions are exactly the same, and $\alpha = \alpha^{'}$ by the definition of footprint.

Let $t = Transcript(\overline{D}, \Sigma_1^{'}(\alpha)) = (qa_1, qa_2, \ldots)$ and $t^{'} = Transcript(\overline{D}, \Sigma_1^{'}(\alpha^{'}))$ $= (qa_1^{'}, qa_2^{'}, \ldots)$. By Lemma 2 we know t is finite; suppose its length to be l. Since both $\overline{D}$ and $\widetilde{S}$ are deterministic, there is a deterministic function $\overline{Q_A}$ that determines the next query from the partial transcript attained so far (we use notation $\overline{Q_A}$ because the distinguisher is replaced by $\overline{D}$ compared with Sect. 5). Then if

$t \neq t^{'}$, there must exist $1 \leq j \leq l$ s.t. $qa_j \neq qa_j^{'}$. We show this to be impossible: suppose j to be the smallest value such that $qa_j \neq qa_j^{'}$. Then $t_{j-1} = t_{j-1}^{'}$ and $\overline{Q_A}(t_{j-1}) = \overline{Q_A}(t_{j-1}^{'})$, which means that the *procedure* and *query* fields of qa_j and $qa_j^{'}$ equal correspondingly. We show their *answer* fields to be equal to contradict the assumption. For the following cases:

- When the *procedure* field of qa_j and $qa_j^{'}$ is F, Enc, or Dec, following the same line as the proof of Lemma 19 and by $\{G_i\} \equiv \{G_i^{'}\}$, the *answer* fields are equal. The difference between this proof and that of Lemma 19 is that in this proof, the queries are not necessarily issued by $\overline{D}$; however this has no essential influence on the equality.
- The last case is when the *procedure* field of qa_j and $qa_j^{'}$ is $Check$. In this case, the *answer* fields depend on the tables $\widetilde{E}(\eta).E$ and $\widetilde{E}(\eta^{'}).E$. By construction we know $\widetilde{E}(\eta).E$ ($\widetilde{E}(\eta^{'}).E$, resp.) can be enlarged only if $\widetilde{E}(\eta).Enc$ or $\widetilde{E}(\eta).Dec$ ($\widetilde{E}(\eta^{'}).Enc$ or $\widetilde{E}(\eta^{'}).Dec$, resp.) is queried. By assumption we know $t_{j-1} = t_{j-1}^{'}$, hence before the j-th query is made, each (δ, k, z) queried in $\overline{D}^{\Sigma_1^{'}(\alpha)}$ is also queried in $\overline{D}^{\Sigma_1^{'}(\alpha^{'})}$, and they get same answers. Therefore when the j-th query is made, the two tables $\widetilde{E}(\eta).E$ and $\widetilde{E}(\eta^{'}).E$ have exactly same contents. This implies the return values of the two corresponding check calls to be equal, i.e. the *answer* fields are equal.

Hence $qa_i = qa_i^{'}$ for any $1 \leq i \leq l$, $t_l = t_l^{'}$, $\overline{Q_A}(t_l) = \overline{Q_A}(t_l^{'}) = \perp$, the length of $t^{'}$ is also l, and $t = t^{'}$, a contradiction. This concludes the proof. □

The following lemma links the randomness brought in by η tape accessing actions in $\Sigma_1^{'}$ to that in by certain π tape accessing actions in Σ_2.

Lemma 21. *During a good execution* $\overline{D}^{\Sigma_1^{'}(\widetilde{E}(\eta),\widetilde{S}(\varphi))}$*, the number of* η *tape accessing action equals the number of calls to Adapt.*

Proof. During a good execution $\overline{D}^{\Sigma_1^{'}(\widetilde{E}(\eta),\widetilde{S}(\varphi))}$:

- Each call to *Adapt* corresponds to a distinct η tape accessing action, since $\widetilde{E}(\eta)$ must be queried by $\widetilde{S}(\varphi)$ either during $EvalForward$ or during $EvalBackward$. These actions must be distinct since otherwise different calls to *Adapt* correspond to a same plaintext-ciphertext-key tuple of $\widetilde{E}(\eta)$ which implies some entries to be overwritten.
- Each η tape accessing action corresponds to a call to *Adapt*: if the action is triggered by query (to $\widetilde{E}(\eta)$) issued by $\widetilde{S}(\varphi)$, then clearly $\widetilde{S}(\varphi)$ is completing a chain and will call *Adapt* soon; if the action is triggered by query issued by $\overline{D}$, then $\overline{D}$ will query the corresponding KAF_{21}^{*} computation path, and will reach the point when the 3 corresponding values x_{10}, x_{11}, and x_{12} are all in the G tables. After this point a chain equivalent to $(x_{10}, x_{11}, x_{12}, 10)$ must have been enqueued and has been adapted accordingly. □

Then we bound the probability ratio between partial tuples linked by τ.

Lemma 22. *Consider a fixed q'-query distinguisher $\overline{D}$. Let $u \in R_1^{good-f}$. Then for any randomly chosen tapes (η, φ) and π the following holds:*

$$\frac{Pr[\pi \cong \tau(u)]}{Pr[FootPrint((\eta,\varphi),\overline{D}) = u]} \geq 1 - \frac{(10q'^3)^2}{2^{2n}}$$

Proof. Clearly if $\overline{D}$ gets same values for any tape accessing action in $\overline{D}^{\Sigma_1'(\widetilde{E}(\eta),\widetilde{S}(\varphi))}$ and $\overline{D}^{\Sigma_1'(u)}$, then $FootPrint((\eta,\varphi),\overline{D}) = u$ holds. Let $u = (\eta^*, \varphi^*)$, and suppose φ^* tape was accessed i times while η^* tape j times during $\overline{D}^{\Sigma_1'(u)}$. Since $\overline{D}^{\Sigma_1'(u)}$ is good, by Lemma 21 each η^* tape accessing action corresponds to one call to *Adapt*/two n-bit adapted values in $\{G_i\}$. Hence at the end of $\overline{D}^{\Sigma_1'(u)}$, $\{G_i\}$ contains $i+2j$ entries; this implies $|\tau(u)| = i+2j$, and $Pr[\pi \cong \tau(u)] = (2^{-n})^{i+2j}$.

On the other hand, in $\overline{D}^{\Sigma_1'(\widetilde{E}(\eta),\widetilde{S}(\varphi))}$, for each η tape accessing action, we have $Pr[\eta(\delta,x,k) = \eta^*(\delta,x,k)] \in [\frac{1}{2^{2n}-j}, \frac{1}{2^{2n}}]$ while for each φ tape accessing action we have $Pr[\varphi(x) = \varphi^*(x)] = 2^{-n}$. Hence we lower bound the probability ratio as

$$\begin{aligned}\frac{Pr[\pi \cong \tau(u)]}{Pr[FootPrint((\eta,\varphi),\overline{D}) = u]} &\geq \frac{(2^{-n})^{i+2j}}{(2^{-n})^i \cdot (\frac{1}{2^{2n}-j})^j} \\ &= (\frac{2^{2n}-j}{2^{2n}})^j\end{aligned}$$

By Lemma 2 we have $j \leq 10q'^3$, hence

$$\frac{Pr[\pi \cong \tau(u)]}{Pr[FootPrint((\eta,\varphi),\overline{D}) = u]} \geq 1 - \frac{(10q'^3)^2}{2^{2n}}$$

as claimed. □

Lemma 23. $\sum_{v \in R_2 \wedge \overline{D}^{\Sigma_2(v)}=1} Pr_\pi[\pi = v] \geq \sum_{u \in \tau(R_1^{good-f}) \wedge \overline{D}^{\Sigma_2(u)}=1} Pr_\pi[\pi \cong u]$.

Proof. To show the claim, we show that R_2 can be partitioned such that each subset corresponds to at most one $u \in \tau(R_1^{good-f})$; more clearly, for any $v \in R_2$, there exists at most one $u \in \tau(R_1^{good-f})$ s.t. $v \cong u$. Assume otherwise, i.e. $\exists u, u'$ s.t. $u \neq u'$, $v \cong u$ and $v \cong u'$. Let $v = (\pi_1^v, \ldots, \pi_{21}^v)$, $u = (\pi_1, \ldots, \pi_{21})$, $u' = (\pi_1', \ldots, \pi_{21}')$, and let the preimages of u and u' be $\alpha = (\eta, \varphi)$ and $\alpha' = (\eta', \varphi')$ respectively. Consider the two executions $\overline{D}^{\Sigma_1'(\alpha)}$ and $\overline{D}^{\Sigma_1'(\alpha')}$, and let $\{G_i\}$ and $\{G_i'\}$ be the tables standing at the end of them respectively. We show the two executions to be the same: for any query $F(i,x)$, the answers in them two are equal since $\widetilde{S}(\varphi).F(i,x) = G_i(x) = \pi_i(x) = \pi_i^v(x) = \pi_i'(x) = G_i'(x) = \widetilde{S}(\varphi').F(i,x)$, unless $\widetilde{S}$ in either of them accesses an empty entry; however this is impossible since both α and α' are footprints. Following the same line as in the

proof of Lemma 20 we see all the queries in the two executions get exactly same answers and $Transcript(\overline{D}, \Sigma_1^{'}(\alpha)) = Transcript(\overline{D}, \Sigma_1^{'}(\alpha'))$. Hence $\alpha = \alpha'$, and this implies $u = u'$ by τ being one-to-one (Lemma 20), contradicting the assumption. Then we have:

$$\begin{aligned}
\sum_{v \in R_2 \wedge \overline{D}^{\Sigma_2(v)}=1} Pr_\pi[\pi = v] &\geq \sum_{v \in R_2 \wedge \exists u \in \tau(R_1^{good-f}) \ s.t. \ v \cong u \wedge \overline{D}^{\Sigma_2(v)}=1} Pr_\pi[\pi = v] \\
&= \sum_{u \in \tau(R_1^{good-f}) \wedge \overline{D}^{\Sigma_2(u)}=1} \left[\sum_{v \in R_2 \wedge v \cong u} Pr_\pi[\pi = v] \right] \\
&= \sum_{u \in \tau(R_1^{good-f}) \wedge \overline{D}^{\Sigma_2(u)}=1} Pr_\pi[\pi \cong u]
\end{aligned}$$

as claimed. □

The next lemma bounds the ratio between the probabilities that $\overline{D}$ outputs 1 in the two systems.

Lemma 24. *For any deterministic q'-query distinguisher $\overline{D}$, we have*

$$\frac{Pr_\pi[\overline{D}^{\Sigma_2(KAF_{21}^*, \mathbf{F}(\pi))} = 1]}{Pr_{(\eta,\varphi)}[(\eta, \varphi) \ is \ good \wedge \overline{D}^{\Sigma_1^{'}(\widetilde{E}(\eta), \widetilde{S}(\varphi))} = 1]} \geq 1 - \frac{(10q'^3)^2}{2^{2n}}$$

Proof. Given that the output of $\overline{D}$ is kept under τ (Lemma 19), τ is one-to-one (Lemma 20), the inequality in Lemma 23, and the upper bound of the ratio

(Lemma 22), we have:

$$
\begin{aligned}
&\frac{Pr_{\pi}[\overline{D}^{\Sigma_2(KAF_{21}^{*},\mathbf{F}(\pi))}=1]}{Pr_{(\eta,\varphi)}[(\eta,\varphi)\ is\ good\wedge\overline{D}^{\Sigma_1^{'}(\widetilde{E}(\eta),\widetilde{S}(\varphi))}=1]}\\
=&\frac{\sum_{v\in R_2\wedge\overline{D}^{\Sigma_2(v)}=1}Pr_{\pi}[\pi=v]}{\sum_{u\in R_1^{good-f}\wedge\overline{D}^{\Sigma_1^{'}(u)}=1}Pr_{(\eta,\varphi)}[FootPrint((\eta,\varphi),\overline{D})=u]}\\
\geq&\frac{\sum_{v\in\tau(R_1^{good-f})\wedge\overline{D}^{\Sigma_2(v)}=1}Pr_{\pi}[\pi\cong v]}{\sum_{u\in R_1^{good-f}\wedge\overline{D}^{\Sigma_1^{'}(u)}=1}Pr_{(\eta,\varphi)}[FootPrint((\eta,\varphi),\overline{D})=u]}\\
=&\sum_{u\in R_1^{good-f}\wedge\overline{D}^{\Sigma_1^{'}(u)}=1}\frac{Pr_{\pi}[\pi\cong\tau(u)]}{Pr_{(\eta,\varphi)}[FootPrint((\eta,\varphi),\overline{D})=u]}\\
\geq&\sum_{u\in R_1^{good-f}\wedge\overline{D}^{\Sigma_1^{'}(u)}=1}\frac{(1-\frac{(10q'^3)^2}{2^{2n}})Pr_{(\eta,\varphi)}[FootPrint((\eta,\varphi),\overline{D})=u]}{Pr_{(\eta,\varphi)}[FootPrint((\eta,\varphi),\overline{D})=u]}\\
=&(1-\frac{(10q'^3)^2}{2^{2n}})\sum_{u\in R_1^{good-f}\wedge\overline{D}^{\Sigma_1^{'}(u)}=1}\frac{Pr_{(\eta,\varphi)}[FootPrint((\eta,\varphi),\overline{D})=u]}{Pr_{(\eta,\varphi)}[FootPrint((\eta,\varphi),\overline{D})=u]}\\
=&1-\frac{(10q'^3)^2}{2^{2n}}
\end{aligned}
$$

as claimed. □

Now we are ready to bound the advantage of distinguishing $\Sigma_1^{'}$ and Σ_2:

Lemma 25. *For any deterministic q-query distinguisher* $\mathbf{D}$*, we have*

$$Pr[\mathbf{D}^{\Sigma_1^{'}}=1]-Pr[\mathbf{D}^{\Sigma_2}=1]\leq\frac{2^{222}\cdot q^{30}}{2^n}+\frac{2^{34}\cdot q^6}{2^{2n}}$$

Proof. Let $\overline{D}$ be the distinguisher which completes all chains corresponding to $\mathbf{D}$. Then $\overline{D}$ makes at most $22q$ queries, and by Lemma 7 we have

$$
\begin{aligned}
Pr[\overline{D}^{\Sigma_1^{'}}=1]&\leq Pr[\overline{D}^{\Sigma_1^{'}}\ is\ good\wedge\overline{D}^{\Sigma_1{'}}=1]+Pr[\textbf{BadHit}\ happens\ during\ \overline{D}^{\Sigma_1^{'}}]\\
&\leq Pr[\overline{D}^{\Sigma_1^{'}}\ is\ good\wedge\overline{D}^{\Sigma_1{'}}=1]+\frac{2^{88}\cdot(22q)^{30}}{2^n}
\end{aligned}
$$

By Lemma 24 we have

$$Pr[\overline{D}^{\Sigma_2}=1]\geq(1-\frac{(10(22q)^3)^2}{2^{2n}})\cdot Pr[\overline{D}^{\Sigma_1^{'}}\ is\ good\wedge\overline{D}^{\Sigma_1^{'}}=1]$$

Thus

$$
\begin{aligned}
Pr[\overline{D}^{\Sigma_1^{'}}=1]-Pr[\overline{D}^{\Sigma_2}=1]&\leq\frac{2^{88}\cdot(22q)^{30}}{2^n}+\frac{(10(22q)^3)^2}{2^{2n}}\cdot Pr[\overline{D}^{\Sigma_1^{'}}=1\wedge\overline{D}^{\Sigma_1^{'}}\ is\ good]\\
&\leq\frac{2^{88}\cdot(22q)^{30}}{2^n}+\frac{100(22q)^6}{2^{2n}}
\end{aligned}
$$

Since $\overline{D}$ has exactly the same advantage as $\mathbf{D}$, we reach the conclusion. □

References

1. Abed, F., List, E., Lucks, S., Wenzel, J.: Differential cryptanalysis of round-reduced simon and speck. In: Fast Software Encryption 2014. Lecture Notes in Computer Science, Springer Berlin Heidelberg (2014, to appear)
2. Andreeva, E., Bogdanov, A., Dodis, Y., Mennink, B., Steinberger, J.: On the indifferentiability of key-alternating ciphers. In: Canetti, R., Garay, J. (eds.) Advances in Cryptology - CRYPTO 2013, Lecture Notes in Computer Science, vol. 8042, pp. 531–550. Springer Berlin Heidelberg (2013)
3. Andreeva, E., Bogdanov, A., Mennink, B.: Towards understanding the known-key security of block ciphers. In: Moriai, S. (ed.) Fast Software Encryption, pp. 348–366. Lecture Notes in Computer Science, Springer Berlin Heidelberg (2014)
4. Aysum, A., Gulcan, E., Schaumont, P.: Simon says, break the area records for symmetric key block ciphers on fpgas. Tech. rep., Cryptology ePrint Archive, Report 2014/237, 2014. http://eprint.iacr.org
5. Barbosa, M., Farshim, P.: The related-key analysis of feistel constructions. In: Fast Software Encryption 2014. Lecture Notes in Computer Science, Springer Berlin Heidelberg (2014, to appear)
6. Beaulieu, R., Shors, D., Smith, J., Treatman-Clark, S., Weeks, B., Wingers, L.: The simon and speck families of lightweight block ciphers
7. Biryukov, A., Nikoli, I.: Complementing feistel ciphers. In: Moriai, S. (ed.) Fast Software Encryption, pp. 3–18. Lecture Notes in Computer Science, Springer Berlin Heidelberg (2014)
8. Biryukov, A., Roy, A., Velichkov, V.: Differential analysis of block ciphers simon and speck. In: Fast Software Encryption 2014. Lecture Notes in Computer Science, Springer Berlin Heidelberg (2014, to appear)
9. Bogdanov, A., Knudsen, L., Leander, G., Standaert, F.X., Steinberger, J., Tischhauser, E.: Key-alternating ciphers in a provable setting: Encryption using a small number of public permutations. In: Pointcheval, D., Johansson, T. (eds.) Advances in Cryptology – EUROCRYPT 2012, Lecture Notes in Computer Science, vol. 7237, pp. 45–62. Springer Berlin Heidelberg (2012)
10. Boura, C., Naya-Plasencia, M., Suder, V.: Scrutinizing and improving impossible differential attacks: Applications to clefia, camellia, lblock and simon. In: Advances in Cryptology – ASIACRYPT 2014. Lecture Notes in Computer Science, Springer Berlin Heidelberg (2014, to appear), full version avaiable: http://eprint.iacr.org/
11. Chen, S., Steinberger, J.: Tight security bounds for key-alternating ciphers. In: Nguyen, P., Oswald, E. (eds.) Advances in Cryptology – EUROCRYPT 2014, Lecture Notes in Computer Science, vol. 8441, pp. 327–350. Springer Berlin Heidelberg (2014)
12. Coron, J.S., Patarin, J., Seurin, Y.: The random oracle model and the ideal cipher model are equivalent. In: Wagner, D. (ed.) Advances in Cryptology - CRYPTO 2008, Lecture Notes in Computer Science, vol. 5157, pp. 1–20. Springer Berlin Heidelberg (2008)
13. Holenstein, T., Künzler, R., Tessaro, S.: The equivalence of the random oracle model and the ideal cipher model, revisited. In: Proceedings of the Forty-third Annual ACM Symposium on Theory of Computing. pp. 89–98. STOC '11, ACM, New York, NY, USA (2011)

14. Isobe, T., Shibutani, K.: Generic key recovery attack on feistel scheme. In: Sako, K., Sarkar, P. (eds.) Advances in Cryptology – ASIACRYPT 2013, Lecture Notes in Computer Science, vol. 8269, pp. 464–485. Springer Berlin Heidelberg (2013)
15. Knudsen, L., Rijmen, V.: Known-key distinguishers for some block ciphers. In: Kurosawa, K. (ed.) Advances in Cryptology - ASIACRYPT 2007, Lecture Notes in Computer Science, vol. 4833, pp. 315–324. Springer Berlin Heidelberg (2007)
16. Lampe, R., Patarin, J., Seurin, Y.: An asymptotically tight security analysis of the iterated even-mansour cipher. In: Wang, X., Sako, K. (eds.) Advances in Cryptology – ASIACRYPT 2012, Lecture Notes in Computer Science, vol. 7658, pp. 278–295. Springer Berlin Heidelberg (2012)
17. Lampe, R., Seurin, Y.: How to construct an ideal cipher from a small set of public permutations. In: Sako, K., Sarkar, P. (eds.) Advances in Cryptology - ASIACRYPT 2013, Lecture Notes in Computer Science, vol. 8269, pp. 444–463. Springer Berlin Heidelberg (2013)
18. Lampe, R., Seurin, Y.: Security analysis of key-alternating feistel ciphers. In: Fast Software Encryption 2014. Lecture Notes in Computer Science, Springer Berlin Heidelberg (2014, to appear)
19. Luby, M., Rackoff, C.: How to construct pseudorandom permutations from pseudorandom functions. SIAM Journal on Computing 17(2), 373–386 (1988)
20. Mandal, A., Patarin, J., Seurin, Y.: On the public indifferentiability and correlation intractability of the 6-round feistel construction. In: Cramer, R. (ed.) Theory of Cryptography, Lecture Notes in Computer Science, vol. 7194, pp. 285–302. Springer Berlin Heidelberg (2012)
21. Maurer, U., Pietrzak, K.: The security of many-round luby-rackoff pseudo-random permutations. In: Biham, E. (ed.) Advances in Cryptology – EUROCRYPT 2003, Lecture Notes in Computer Science, vol. 2656, pp. 544–561. Springer Berlin Heidelberg (2003)
22. Maurer, U., Renner, R., Holenstein, C.: Indifferentiability, impossibility results on reductions, and applications to the random oracle methodology. In: Naor, M. (ed.) Theory of Cryptography, Lecture Notes in Computer Science, vol. 2951, pp. 21–39. Springer Berlin Heidelberg (2004)
23. Patarin, J.: Pseudorandom permutations based on the d.e.s. scheme. In: Cohen, G., Charpin, P. (eds.) EUROCODE '90, Lecture Notes in Computer Science, vol. 514, pp. 193–204. Springer Berlin Heidelberg (1991)
24. Patarin, J.: Security of random feistel schemes with 5 or more rounds. In: Franklin, M. (ed.) Advances in Cryptology – CRYPTO 2004, Lecture Notes in Computer Science, vol. 3152, pp. 106–122. Springer Berlin Heidelberg (2004)
25. Sasaki, Y., Emami, S., Hong, D., Kumar, A.: Improved known-key distinguishers on feistel-sp ciphers and application to camellia. In: Susilo, W., Mu, Y., Seberry, J. (eds.) Information Security and Privacy, Lecture Notes in Computer Science, vol. 7372, pp. 87–100. Springer Berlin Heidelberg (2012)
26. Sasaki, Y., Yasuda, K.: Known-key distinguishers on 11-round feistel and collision attacks on its hashing modes. In: Joux, A. (ed.) Fast Software Encryption, Lecture Notes in Computer Science, vol. 6733, pp. 397–415. Springer Berlin Heidelberg (2011)
27. Seurin, Y.: Primitives et protocoles cryptographiques àsécurité prouvée. Ph.D. thesis, PhD thesis, Université de Versailles Saint-Quentin-en-Yvelines, France, 2009 (2009)
28. Sun, S., Hu, L., Wang, P., Qiao, K., Ma, X., Song, L.: Automatic security evaluation and (related-key) differential characteristic search: Application to simon, present,

lblock, des(l) and other bit-oriented block ciphers. In: Advances in Cryptology – ASIACRYPT 2014. Lecture Notes in Computer Science, Springer Berlin Heidelberg (2014, to appear), full version avaiable: http://eprint.iacr.org/

29. Todo, Y.: Upper bounds for the security of several feistel networks. In: Boyd, C., Simpson, L. (eds.) Information Security and Privacy, Lecture Notes in Computer Science, vol. 7959, pp. 302–317. Springer Berlin Heidelberg (2013)